80-1143-03
Rev. 10.7

MODEL 11-439

BECK®

INSTRUCTION MANUAL

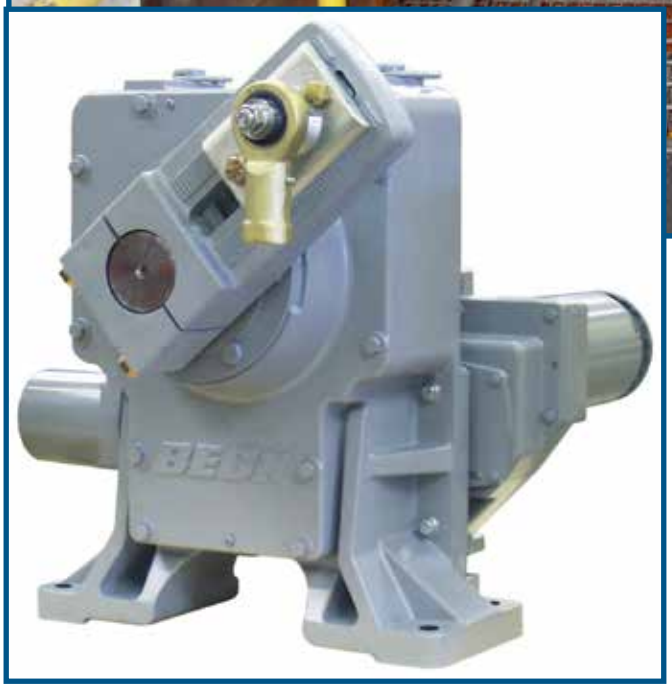

For actuators equipped with the DCM-3 (built after July 2016)

C US

ELECTRIC ACTUATORS FOR INDUSTRIAL PROCESS CONTROL

INTRODUCTION

This manual contains the information needed to install, operate, and maintain Beck Model 11-439 Electric Actuators, manufactured by Harold Beck & Sons, Inc. of Newtown, Pennsylvania.

The 11-439 is a high torque electric actuator capable of providing up to 5,200 lb-ft [7 046 N•m] of torque.

NOTE: This manual includes information that will make installation simple, efficient, and trouble-free. Please read and understand the appropriate sections in this manual before attempting to install or operate your drive.

The 11-439 electric actuator is designed to provide precise position control of multiple burner tilt arrays, dampers and other devices with high torque requirements.

The 11-439 consists of a Beck 11-409 actuator connected to a large gear reduction unit that increases the output torque of the 11-409 by a factor of 3:1.

Group 75 compact rotary actuators ...
incorporate a very compact design with high temperature resistance and great mounting flexibility; making these actuators ideal for boiler windbox applications as well as all types of rotary valve applications in tight spaces.

Group 42 linear actuators ...
incorporate a long stroke design providing up to 1,000 lbs. (4450 N) of thrust. These actuators are ideally suited for burner air register type applications.

Group 22 digital control actuators ...
are designed for accurate, reliable, modulating digital control of high torque applications. These actuators are ideal for use in large boiler applications, such as ID/FD fan dampers.

Group 29 linear valve actuators ...
are ideally suited for globe valves from 1" to 8" (25 mm to 203 mm) diameter. Beck's unique Tight-Seater™ coupling provides positive seating of valves.

Group 14 linear actuators ...
are ideally suited for globe valves from 1" to 8" (25 to 203 mm) diameter. Beck's unique Tight-Seater™ coupling provides positive seating of valves.

Group 31 compact rotary actuators ...
are particularly suited for coupling to ball, plug, and butterfly valves up to 4" (102 mm) diameter, and small dampers.

TABLE OF CONTENTS

General Specifications 4

Outline Dimension Drawings 6

Precautionary Information 8

General Operation Information 9

Installation

- Mechanical 10
- Electrical 13
- Wiring 14

Start-up 15

Electronics 16

Configuration / Calibration 20

Maintenance 35

Troubleshooting 45

Appendices

- HART® Communication 50
- HART® Messages 56
- Serial Communication 59
- Serial Commands 60

Index 66

Services 67

GENERAL SPECIFICATIONS

Drive Power	120 Vac, single-phase, 60 Hz (standard), 50 Hz (optional) 208, 240, 380, 415, 480 & 575 Vac, 50 or 60 Hz (optional)	Allowable Tolerance: +10% - 15%

Max. Current (Amps) by Supply Voltage (Vac)

		Voltage						
Model	**Power (VA)**	**120**	**208**	**240**	**380**	**415**	**480**	**575**
11-439	400	3.1	1.8	1.6	.98	.89	.78	.65

Operating Conditions	-40° to 85°C (-40° to 185°F) 0 to 100% relative humidity, non-condensing
Communication Interface	HART protocol (Rev. 5 -- burst mode is not supported) Pushbutton / LEDs DB9 Serial commands.
Demand input Signal Options (DCM-3)	4–20 mA (1–5 Vdc input is possible with the removal of the "R11" resistor located on the DCM-3 board (see page 40).
Adjustability for Split Range Operation	0%: 0.1 V to 4 Vdc 100%: 0% + 1 V min. to 5 V max.
Step Size	0.15% typical (configurable).
Linearity	±1% of span, max. independent error
Hysteresis	0.25% of span at any point.
Demand input Signal Characterization	Linear: Actuator output shaft moves proportionally to the input signal. Square: Actuator output shaft moves proportionally to the square of the input signal. Custom: Actuator output shaft moves according to the custom demand response curve.
Position Feedback Signal for Remote Indication	4–20 mA
Isolation	Demand input and position Feedback signals are isolated from ground and the ac power line. Signal buffering provides 24 Vdc isolation between the Demand and Feedback signals.
Action on Loss of Power	Stays in place.
Action on Loss of Input Signal (Power On)	Stays in place or drives to any preset position (configurable).
Stall Protection (Optional)	If the motor tries to run in one direction for more than 300 seconds (configurable from 30 to 300 seconds), the DCM-3 will shut off power to the motor (feature can be enabled/disabled).
Overtorque Protection (Optional)	The DCM-3 shuts off power to the motor if the measured output torque of the actuator exceeds 150% (adjustable from 70% to 150%) of the actuator rating (feature can be enabled/disabled).

Alarm Annunciation	Available at terminal E.
Temperature Indication	Measures the internal temperature of the actuator and triggers an alarm when the temperature exceeds the rating range.
Over-travel Limit Switches	Two SPDT (CW and CCW) provide over-travel protection.
Auxiliary Switches	Up to four 6 A, 120 Vac switches available. Switches are labeled S1 to S4 and are cam-operated, field-adjustable. Unless otherwise specified, auxiliary switches are factory set: S1 and S4 are set to operate just before reaching the CCW travel limit. S2 and S3 are set to operate just before reaching the CW travel limit.
Handswitch	Permits local electrical operation, independent of controller signal. Standard on all units. An auxiliary contact is available for auto indication (rated 2.5A at 120 Vac).
Handwheel	Provides manual operation without electrical power.
Motor	120 Vac, single-phase, no-burnout, non-coasting motor has instant magnetic braking. Requires no contacts or moving parts.
Gear Train	High-efficiency, precision-cut, heat-treated alloy steel and ductile iron spur gears. Interchangeable gear modules permit field change of timing.
Mechanical Stops	Prevent overtravel during automatic or manual operation.
Enclosures	
11-409 Drive	Precision-machined, aluminum alloy castings painted with corrosion-resistant polyurethane paint provide a rugged, dust-tight, weatherproof enclosure. Type 4X; IP66/IP68, 3 meters/48 hours*. *NOTE: Internal water damage is not covered by warranty.
Gear Reduction Unit	Precision-machined, aluminum alloy casting painted with corrosion-resistant polyurethane paint, provides a rugged, dust-tight, weatherproof enclosure.
Models designed for hazard classified locations are also available.	
Mounting Orientation	Any orientation—no limitations.
Standards**	CSA Listed; CE Compliant; UKCA Compliant

**NOTE: May not be available with all options and models. For more information, please call Beck at 215-968-4600.

OUTLINE DIMENSION DRAWINGS

ORIENTATION A

All Dimensions are in inches & [mm].
All information is subject to change.

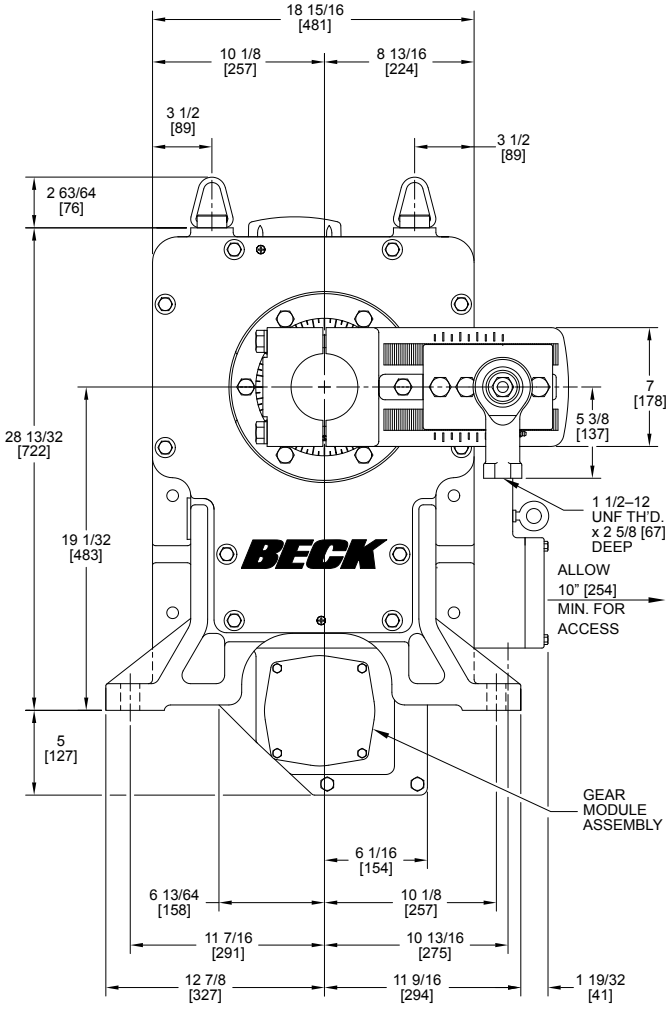

Front View

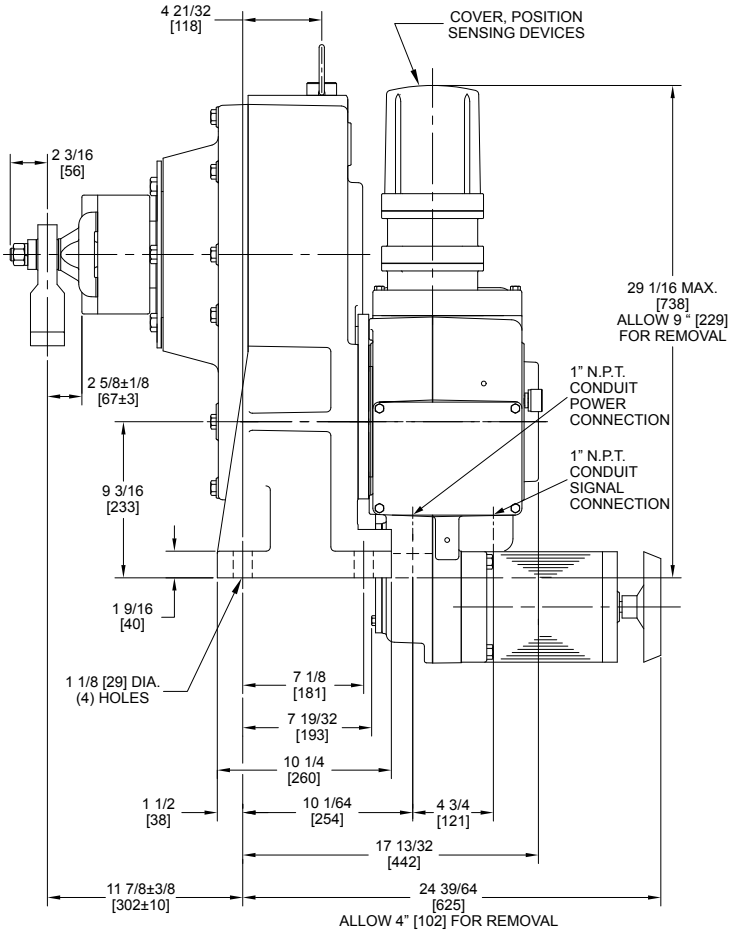

Side View

BECK MODEL 11-439

Torque (lb-ft) [N•m]	Timing (sec.)	Approx. Wt. (lb) [kg]	Output Shaft Dia. (in) [mm]	Max. Overhung Load (lb) [kg]
5,200 [7050]	108 180	790 [358]	3 15/16 [100]	20,000 [9072] Crank Arm 14-8022-42 or 15,000 [6804] Crank Arm 14-8022-44
2,900 [3932]	72 120			

RECOMMENDED BOLT TORQUES

	Size (in.)	Torque (lb-ft)	Torque (N•m)
Gear Reduction Unit			
Crank Arm Clamp Screws (4)	3/4-16	420	569
Rod End Nut	3/4-16	200	271
Crank Pin Screws (3)			
(14-8022-42 crank arm)	3/4-16	420	569
(14-8022-44 crank arm)	3/4-16	300	407
11-400 Actuator			
Cover Screws	5/16-18	10	14
Motor Screws	3/8-16	16	22
Gear Module Screws	5/16-18	10	14
Adaptor Plate to Gear Reduction Unit Screws	1/2-13	45	61

ORIENTATION B

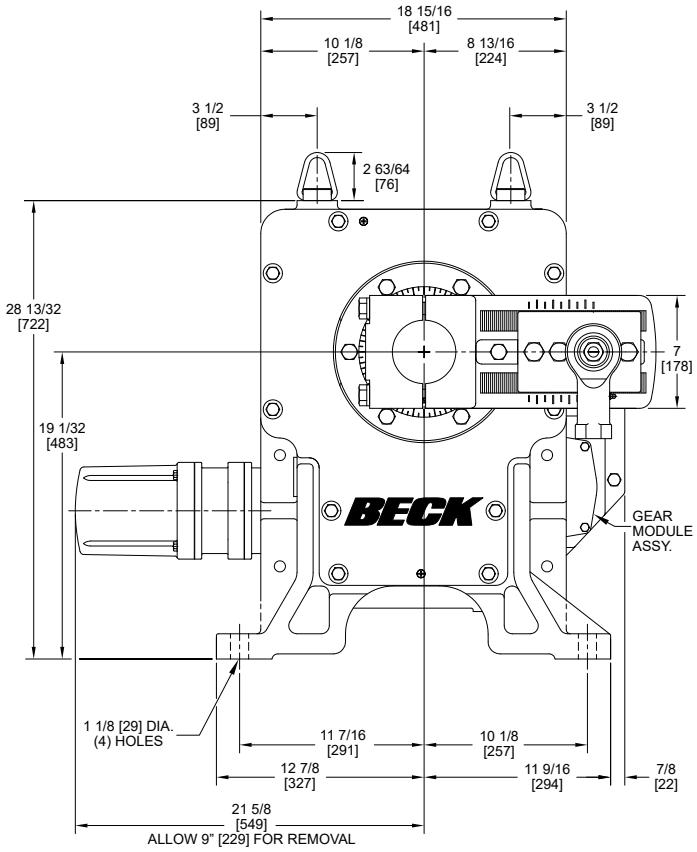

Front View

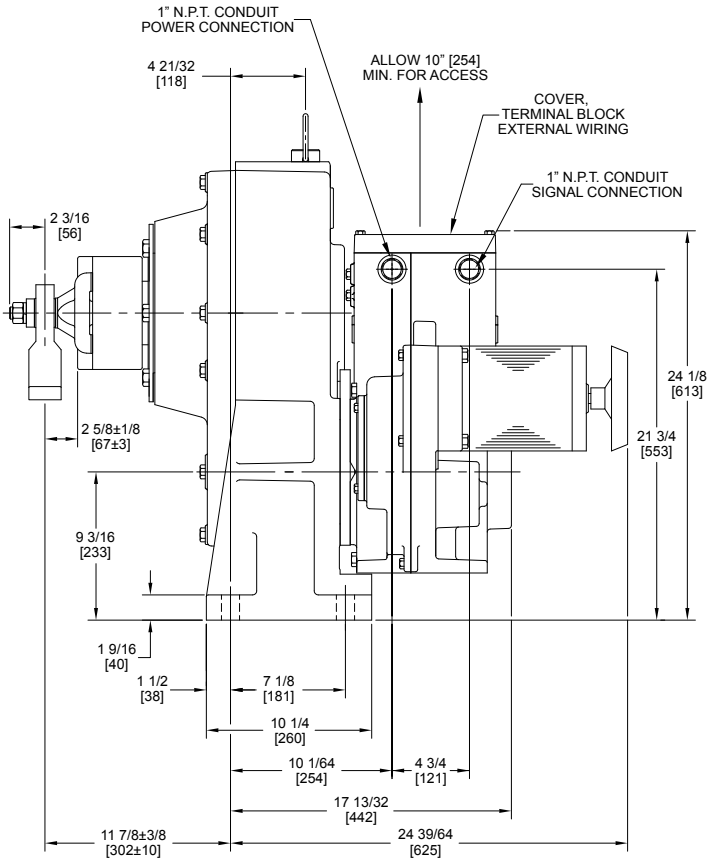

Side View

AVAILABLE CRANK ARMS (WITH ROD END)

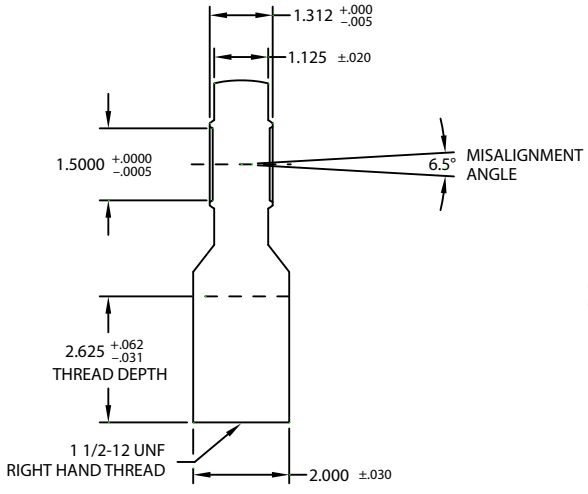

ROD END DETAIL

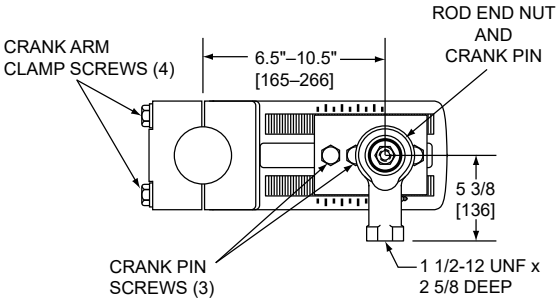

CRANK ARM (p/n 14-8022-42)

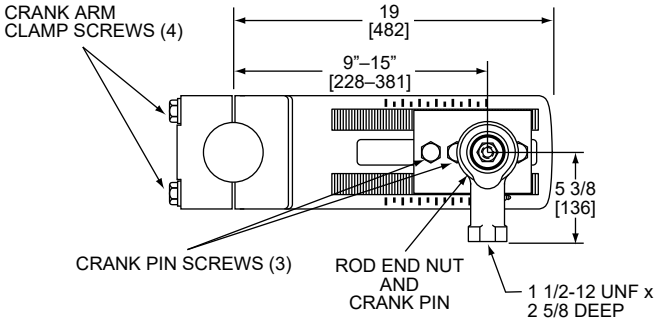

CRANK ARM (p/n 14-8022-44)

PRECAUTIONARY INFORMATION

SAFETY PRECAUTIONS

WARNING

Installation and service instructions are for use by qualified personnel only. To avoid injury and electric shock, do not perform any servicing other than that contained in this manual. Please read and understand the appropriate sections in this manual before attempting to install or operate your drive.

STORAGE INFORMATION

Beck actuators should be stored in a clean, dry area where the temperature is between -40° and 85°C (-40° to 185°F).

Damage due to moisture while in storage is not covered by warranty.

INSTALLATION—MECHANICAL

There are many considerations regarding proper mechanical installation—see the instructions beginning on page 10 for details. Refer to the outline dimension drawings for physical dimensions and required clearances.

INSTALLATION—ELECTRICAL

See the instructions beginning on page 13 for details regarding electrical installation.

CAUTION

For maximum safety, the Beck actuator body should be grounded. Use the green grounding screw in the wiring compartment of the actuator.

CAUTION

Always close covers immediately after installation or service to prevent moisture or other foreign matter from entering the actuator.

CONDUIT ENTRIES

Conduits are provided for power and signal wiring. Temporary plugs are installed in the conduit entrances at the factory for shipping only and are not intended for permanent use. Prior to actuator operation, all conduit entrances must be properly sealed in accordance with National Standards or Regulatory Authorities.

GENERAL OPERATION INFORMATION

MODES OF OPERATION

There are three basic modes of operation:

- **Handwheel—**local mechanical control
- **Handswitch—**local electrical control
- **Automatic—**remote electrical control

Any or all of these modes can be used to test basic operation of your actuator during start-up.

HANDWHEEL

The Handwheel permits manual operation of the actuator without power. The Handwheel is coupled directly to the motor shaft at the rear of the motor housing and it rotates when the motor runs.

The Handwheel is particularly useful during initial installation or when power is not available. If power is available, the Handswitch must be moved to the STOP position before manually operating the Handwheel.

HANDSWITCH

A Handswitch allows local electric control at the actuator. In either of the STOP positions, the motor is blocked from running. In the CW or CCW positions, the motor runs to move the output shaft in the corresponding direction. When moving the output shaft using the Handswitch, the motor will stop when the over-travel limit switches are reached.

The Demand signal can position the actuator only when the Handswitch is in the AUTO position.

AUTOMATIC MODE

When the Handswitch is placed in the AUTO position, the actuator is in automatic mode and responds to a Demand signal (also called the setpoint). The Digital Control Module (DCM-3) compares the Demand signal with the output shaft position. When the DCM-3 detects a difference between Demand and Position (called error), the motor will rotate the output shaft until the Position matches the Demand.

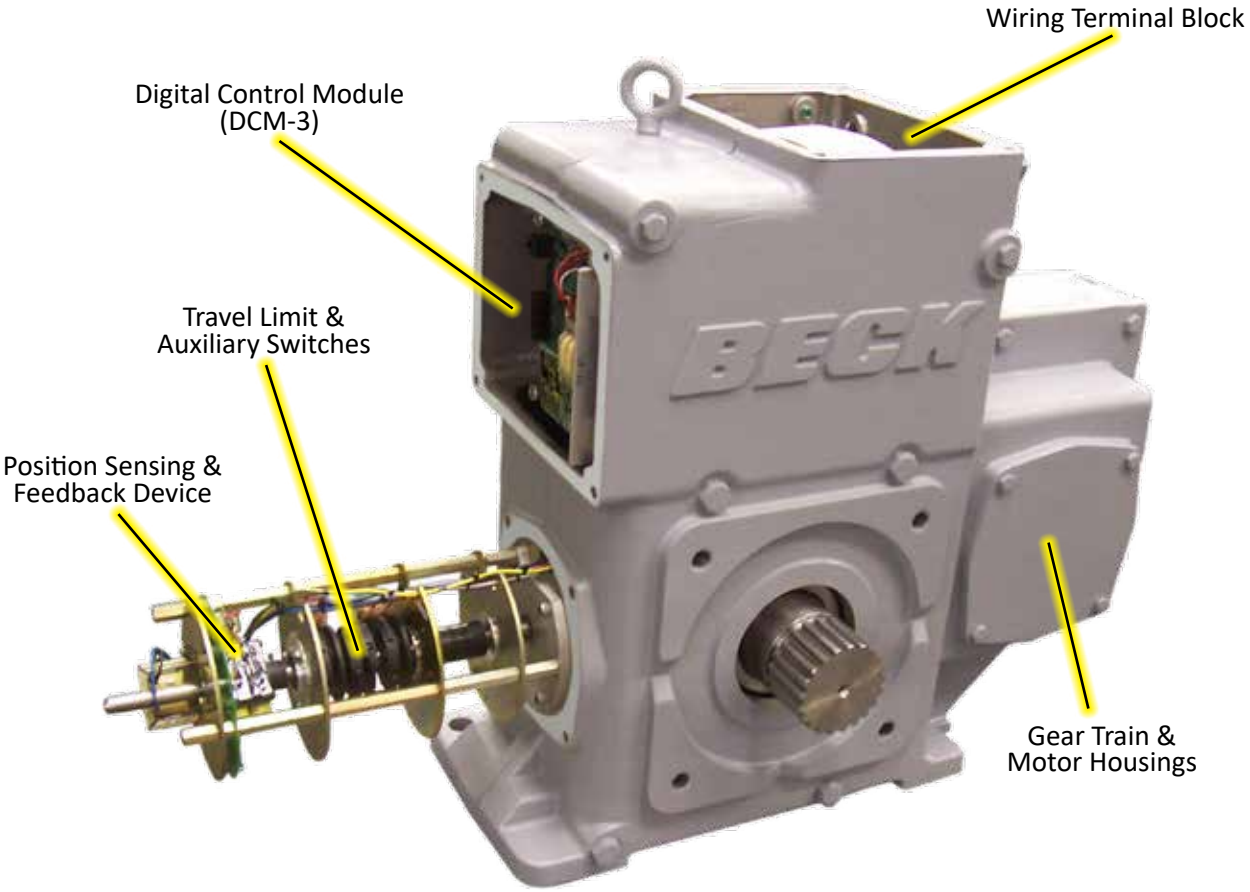

NOTE: Actuator shown without gear reduction unit to enhance detail.

INSTALLATION Mechanical

MOUNTING INSTRUCTIONS

The Beck 11-439 can be installed in any convenient orientation because the gear train does not require an oil bath. Refer to the outline dimension drawings for physical dimensions and required clearances.

The 11-439 must be bolted firmly to a mounting surface which will not yield to the stresses created from operating the device. Use 1" diameter grade 5 bolts and torque to 480 lb-ft (650 N•m) . A flat, rigid, vibration-free surface will generally prolong the life of the actuator's components. Place shims under the feet of the actuator to compensate for inconsistencies in the flatness of the mounting surface before the mounting bolts are tightened.

The output shaft of the actuator should be parallel to the driven shaft, and the linkage should be perpendicular to the plane of the two shafts. Small misalignments can be tolerated if a rod end fitting is used on the driven lever similar to that provided on the Beck crank arm.

11-439 ACTUATOR ASSEMBLY

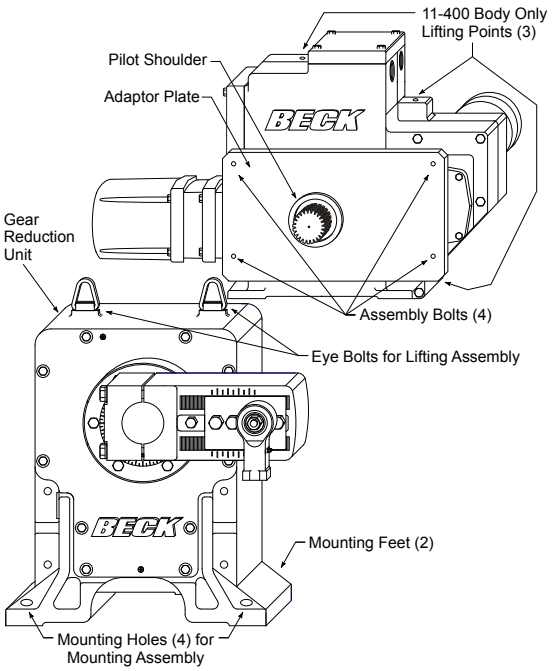

ORIENTATION OPTIONS

The choice of the two available orientation options depends on the installation and the need to access the wiring and electrical adjustments of the 11-409 actuator. Normally the orientation option is selected at the time of order and factory-assembled to that specification. The orientation option can be changed.

CAUTION

Consult the factory before attempting to change the actuator orientation.

Orientation Option A (Page 6)

The 11-439, orientation option A, is bolted to a removable wooden pedestal with four 3/4" hex head bolts. These bolts are not to be used for mounting the actuator to its final mounting platform. The pedestal provides a mounting base for the actuator and also protects the 11-400 control motor. Do not remove the actuator from the pedestal or the protective cover from the motor until the actuator is ready to be placed on its final mounting platform. The pedestal is attached to the wooden shipping skid with metal banding.

Orientation Option B (Page 7)

The 11-439, orientation option B, is bolted directly to the wooden shipping skid. These bolts are not to be used for mounting the actuator to its final mounting platform. Do not remove the actuator from the skid or the protective cover from the motor until the actuator is ready to be placed on its final mounting platform.

LINKAGE REQUIREMENTS

In most applications, the best control will result when the linkage is adjusted so that the full 100° angular travel of the Beck actuator shaft is used, even though the driven shaft may travel less than 100°.

The general requirements for a good linkage are:

1. It must be rigid enough to carry the link thrust without bending or deforming.
2. It must have a built-in means of adjustment so that the length of the connecting link can be changed a small amount.
3. Rod end bearings, similar to those furnished on the Beck crank arm, should be used at both ends of the connecting link. This type of device permits small angular misalignments and helps prevent binding of the linkage.
4. The radius of the Beck crank arm must be calculated so that it will move the damper lever through the correct arc as it travels from 0° to 100°.
5. The actuator and driven shafts must be parallel and the linkage should be in a plane perpendicular to the shafts.

LINK-ASSIST™ REPORT

The Beck Link-Assist™ computer program optimizes the linkage configuration for the application load. It ensures proper setup and operation of the actuator. Contact your Beck Sales Engineer to take advantage of Beck's Link-Assist™ program. Additional Link-Assist™ information is available on the Beck website: *www.haroldbeck.com*.

Linkage Kits Available

Standard Beck linkage kits are made to accommodate a wide variation in linkage lengths without requiring modification of end fittings. This adaptability makes it possible to order the essential linkage end connections even though the exact linkage length may not be known until the actuator is mounted in place.

Each linkage kit includes the essential pipe linkage end connections and all necessary hardware except for Schedule 40 pipe. The crank arm rod end is included with the actuator. To simplify installation of the pipe link, the kit accepts N.P.T. right-hand threads on both ends of the pipe. Left-hand threads are internal to the linkage kit assembly, making final length adjustments quick and easy.

To order Pipe Linkage Kits, first obtain the approximate overall linkage length "A". Select the kit part number from the table below. For lengths beyond those listed in the table, contact your Beck Sales Engineer.

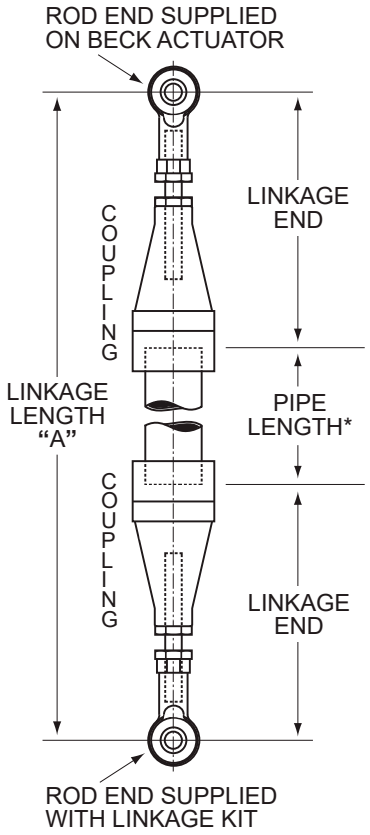

*NOTE: To calculate length of pipe required, subtract "Length of 2 Linkage Ends" (shown in table below) from Linkage Length "A" (shown in diagram above).

11-439 PIPE LINKAGE KITS

Linkage Length Range "A"	Pipe Size	Min. Pipe Nipple Length	Rod End Thread (UNF)	Beck Pipe Linkage Kit Part No.	Length of 2 Linkage Ends (Total Adj. ±1 1/2" (38 mm))	Approx. Weight[1]
23 1/2–40" (597–1016 mm)	2" (51 mm)	2" (51 mm)	1 1/2-12	20-1760-13	21 1/2" (546 mm)	28 lbs (13 kg)
37 3/4–144" (959–3658 mm)	3" (76 mm)	2 5/8" (67 mm)	1 1/2-12	20-1760-10	35 1/8" (892 mm)	32 lbs (15 kg)
59 3/4–144" (1518–3658 mm)	3" (76 mm)	2 5/8" (67 mm)	1 1/2-12	20-1760-09[2]	57 1/8" (1451 mm)	41 lbs (19 kg)

[1]Does not include customer supplied pipe.
[2]Use when the angle between the linkage and crank arm is less than 25°.

INSTALLATION Mechanical

The following procedure is recommended to couple the linkage between the Beck actuator and the driven shaft:

1. Position the driven shaft to it's fully closed position.
2. Set the driven shaft lever to its predetermined starting angle in relation to the driven shaft and actuator shaft centerline.
3. Remove the rod end from the Beck crank arm. Thread the rod end fully onto the connecting link.
4. Adjust the connecting link to the predetermined length.
5. Connect the connecting link to the driven lever at the predetermined radius.
6. Set the crank pin (see illustration on page 7) on the Beck crank arm to the predetermined radius (6.5–10.5 inches or 9–15 inches, depending on the crank arm); this is done by loosening the crank pin bolts and sliding the crank pin to the predetermined position. Tighten the crank pin screws to the torque recommended on page 6.
7. Loosen the crank arm bolts.

CAUTION

The crank arm will pop free -- approx. weight is 125 lbs.

8. Position the actuator's output shaft to correspond with the driven shaft's fully closed position.
9. Swing the crank arm into position and assemble the rod end to the crank arm crank pin. Tighten the rod end nut to the torque recommended on page 6.
10. Tighten the crank arm clamp screws evenly, in a cross-pattern, to the torque recommended on page 6.
11. Lubricate the rod end bearings with LGI #1 EP grease, Mobil grease #28 or equivalent.
12. Carefully move the actuator's output shaft to correspond with the driven shaft's fully open position. Check that no binding occurs between the linkage, crank arm, driven shaft lever, and surrounding obstructions. Also, observe that the driven shaft rotates the proper amount. Ensure that the actuator reaches the proper limit and shuts off. If binding in the linkage occurs due to too much travel of the driven lever, reduce the crank arm radius on the Beck actuator rather than adjusting the connecting link length. Return to step 5 and repeat adjustments.

If necessary, the linkage length may be adjusted by altering the thread engagement in the couplings. The couplings have right- and left-hand threads, so it is not necessary to disconnect the ends to make a length adjustment. The stud threads must be engaged 1.2 diameters deep into the rod ends. Make adjustments by altering thread engagement in couplings only. Be careful not to expose more than 7" (178 mm) of stud between rod end and coupling.

Once again, check operation to determine that no binding occurs between the linkage and crank arm or driven shaft lever. Surrounding objects must not interfere.

Do not change limit switch settings to obtain desired travel of the driven shaft lever. This shortens the travel of the feedback device and reduces the control resolution, repeatability, accuracy of the actuator, and available torque.

For an input control signal change, do not adjust the linkage. Refer to the applicable Calibration section of this manual.

INSTALLATION Electrical

POWER QUALITY

Power quality disturbances such as power outages, transient voltages, harmonic distortions, and electrical noise may adversely affect actuator performance. Protecting the actuator from these conditions can reduce downtime and promote longer life for the equipment. Following the industry accepted standards below will help protect the actuator.

- Select wiring materials according to the correct ampacity ratings dictated by national and local regulations.
- Shielded, twisted pair cables can be used for signal connections to avoid being affected by electrical noise. These signal wires, based on Noise Susceptibility Level (NSL) per IEEE-518, fall into the level 1 classification. A braided shield will be more effective than a wrapped foil shield. Signal wire shields should be connected to the actuator casting grounding screw. If grounding at the signal source is required, then the shield should not be grounded at the actuator.
- Raceways such as conduits and trays must be grounded at both ends to properly meet immunity requirements.
- An AC power ground connection should be made between the power source and the Beck actuator. Grounding connections including wire and metal conduit are permitted, but the actuator-grounding conductor may not be connected to a structured metal frame of a building.
- Surge suppression equipment that meets Underwriters Laboratory (UL) Standard 1449 may be used to protect against transient voltage conditions.
- Power Conditioners may be used to regulate the supply voltage and maintain a constant voltage level. They are helpful in protection against voltage sags and swells, as well as some measure of electrical noise protection.
- Harmonic filters may be used to minimize the effects of supply voltage waveform distortions and are used in applications that incur a large amount of high-frequency electronic noise.

CAUTION

Always close covers immediately after installation or service to prevent moisture or other foreign matter from entering the actuator.

ELECTRICAL INSTALLATION

Two N.P.T. conduit connections are provided for power and signal wiring to the actuator. The 1/2” conduit is provided for signal wiring connections, and the 1” conduit is provided for power and auxiliary switch connections. Conduits should be routed from below the actuator so that condensation and other contaminants flow away from the conduit. All conduit entrances must be properly sealed in accordance with National Standards or Regulatory Authorities.

Power and signal wires should be routed to the actuator separately and be either shielded cables or installed in conductive conduit and/or cable trays.

Refer to the wiring diagram furnished with your Beck actuator for proper AC power and signal connections. The customer must supply 120 V ac to power the actuator (standard configuration). The 120 V ac line connects to terminal C and neutral to terminal B. Other available power options include 208, 240, 380, 416, 480 & 575 V ac.

It is advisable to provide normal short circuit protection on the AC power line. A copy of the wiring diagram is shipped with each actuator and is fastened to the inside of the terminal block cover. If there is no wiring diagram available, you may obtain a copy from Beck by providing the serial number of your actuator.

Connection of a 4-20 mA Demand signal should be made to terminals AA (+) and BB (–).

For maximum safety, the Beck actuator body should be grounded. Use the green grounding screw in the wiring compartment of the actuator.

TERMINAL SCREW TORQUES

Each terminal screw should be torqued to the proper specification upon landing the wire.

	Torque	
Terminals	***(lb-in)***	***(N•m)***
A–V	16	1.8
AA–EE	12	1.4
FF–SS*	9	1.0
1–3*	20	2.3

* Terminals included only with certain optional features.

INSTALLATION Wiring

TERMINAL CONNECTIONS

The terminal block is located in a separate, gasketed compartment at the top of the actuator. Line voltage connections are made on terminal designations A through V and are oriented at a right angle from the low voltage signaling terminals designated AA through EE.

Actuators equipped with optional transformers to accommodate popular voltages include an additional terminal strip and fuse for power wiring (with the exception of the 240 volt option). See optional transformer wiring connections below.

Terminal screws will accept standard spade or ring terminals. Terminals A through V are size #8, and terminals AA through EE are size #6. Optional transformer terminal screws (designated 1, 2, & 3) are size #10. For wiring versatility, the screw-down clamp design will also accept unterminated wire. All terminals will accept up to #12 AWG (3.31 mm^2), with up to #10 AWG wire acceptable for optional transformer terminals (1-3).

Typical wiring connections are shown below. Each actuator can be ordered with up to four optional auxiliary switches (wiring connections are described in the Configuration/Calibration section).

As Supplied With Optional Transformer for 208, 240, 380, 416, 480, & 575 Volts

To prevent Handswitch initiated motion, remove jumper (JA) from between terminals A and C.

CAUTION

AC power to the actuator must be turned off before removing the jumper (JA).

TYPICAL WIRING CONNECTIONS

(Each actuator has a specific wiring diagram on the inside of the terminal compartment cover)

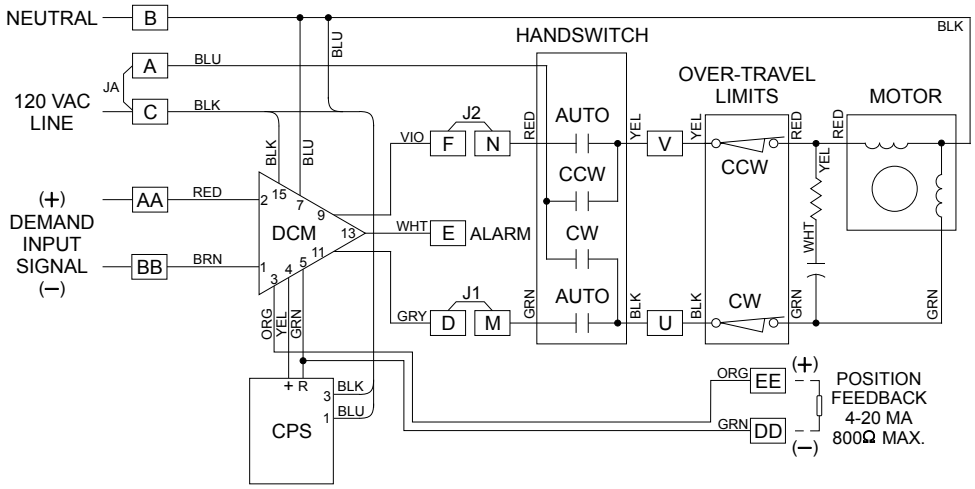

CONNECTIONS FOR ALTERNATE POWER OPTIONS

Optional Transformer for 380, 415, 480 & 575 Volts

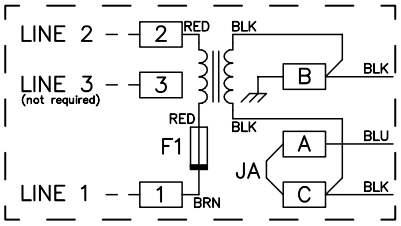

Optional Transformer for 208 Volts

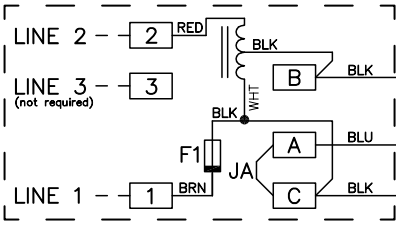

Optional Transformer for 240 Volts

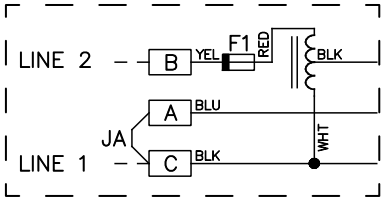

START-UP

NOTE: All Beck actuators are shipped from the factory ready for installation. Each actuator is set-up and calibrated to the customer's specifications that were written into the equipment order. Electrical adjustments are generally not required before placing the actuator in operation.

START-UP CHECKLIST

The following list provides some basic checks that should be performed before placing your actuator into operation.

- ☐ Inspect the location and the mounting bolts. Be sure the actuator is securely fastened to its mounting base.
- ☐ On the first start-up, place the Handswitch in a STOP position to ensure that the output shaft will not move and possibly cause personal injury.
- ☐ Confirm the actuator is receiving the appropriate operating voltage as shown on the nameplate.
- ☐ Check the DCM-3 Power LED. It should be pulsing (Dim/Bright) to indicate the board is active.
- ☐ Using the Handswitch, confirm the actuator moves fully to both the CW and CCW ends of travel.
- ☐ Confirm the actuator has a 4–20 mA Demand signal attached to terminals AA (+) and BB (–).
- ☐ Place the Handswitch in AUTO and vary your Demand signal from 0% to 100%.
- ☐ Check for the Status alarm LED on the DCM-3. If it is lit, refer to the Troubleshooting section of this manual.
- ☐ Verify that the output shaft is moving to the desired 0% position with a 0% Demand signal and moving to the 100% position with a 100% Demand signal. If they are reversed, see the Configuration/Calibration section of this manual for instructions on how to change the direction of output shaft rotation.

ELECTRONICS

CONTROL END & CONTACTLESS POSITION SENSOR (CPS-5)

The actuator "control end" houses the limit switch assemblies and the Contactless Position Sensor (CPS-5). The CPS-5 is the electro-mechanical device that provides the DCM-3 with a continuous feedback signal proportional to the position of the actuator's output shaft.

The control end includes a control shaft, which is geared directly to the output shaft of the actuator. Rotation of the output shaft causes rotation of the control shaft, which in turn moves the limit switch cams and the CPS-5 ferrite rotor. A ferrite magnetic sensing element generates a voltage as the rotor turns. The voltage is translated into a position signal voltage used by the DCM-3 to control the actuator.

The typical position signal voltage of the CPS-5 ranges from 1.0 V dc at the CCW end of travel, to 5.0 V dc at the CW end of travel. The DCM-3 can be calibrated to interpret CPS-5 position signals between 0.3 V dc and 5.3 V dc. Position signal voltages can be measured on the yellow (+) and green (R) position signal wires located on the CPS-5. The CPS-5 power is derived from the blue and black wires on the primary side of the transformer. 120 V ac can be measured across the transformer tabs (blue and black wires).

There are two SPDT over-travel limit switch assemblies (labeled "CW" and "CCW") and up to four auxiliary switch assemblies (labeled "S1" through "S4").

(Transformer View)

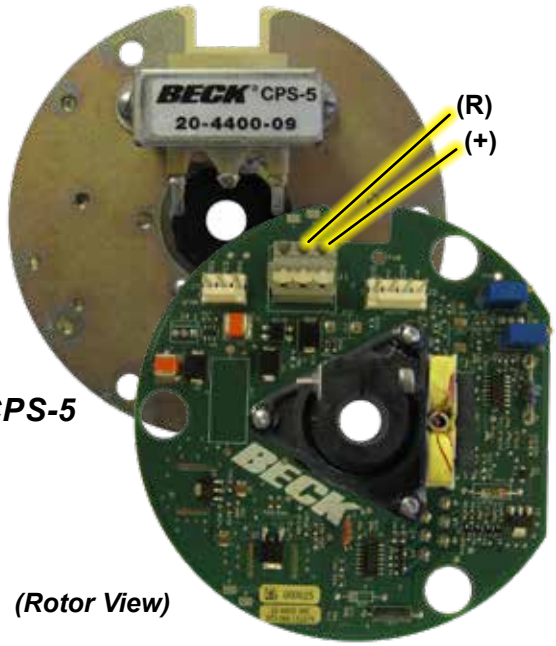

CPS-5

(Rotor View)

DIGITAL CONTROL MODULE (DCM-3)

The DCM-3 is a micro-processor based circuit board assembly that serves as the actuator's control center.

The main function of the DCM-3 is to position the actuator's output shaft. The DCM-3 compares the 4–20 mA Demand signal received at the actuator terminals AA(+) and BB (–) to the actuator position signal, generated from the Contactless Position Sensor (CPS-5). If a difference exists (called error) between the Demand and position signals, the DCM-3 activates triacs that operate the motor. The motor drives the gear train and positions the output shaft until the difference is eliminated.

The DCM-3 layout diagram located on page 19 illustrates the fuse and test point locations. The typical position signal voltage from the CPS-5 (measured from TP1(–) and TP4(+)) ranges from 1.0 V dc at the CCW end of output shaft travel, to 5.0 V dc at the CW end of output shaft travel. Test point voltage levels between TP2(+) and TP3(–) across the input resistor R11 should read between 1 V dc and 5 V dc proportional to the 4–20 mA Demand signal.

DCM-3

INTERFACES

The DCM-3 has three configuration interfaces: Pushbutton, HART, and Serial Port.

PUSHBUTTON

The DCM-3 board is equipped with pushbuttons that can be used to calibrate the Demand signal and configure 0% and 100% positions. It may also be used to configure the direction of output shaft rotation for increasing Demand. These configurations and calibrations do not require any external equipment to perform.

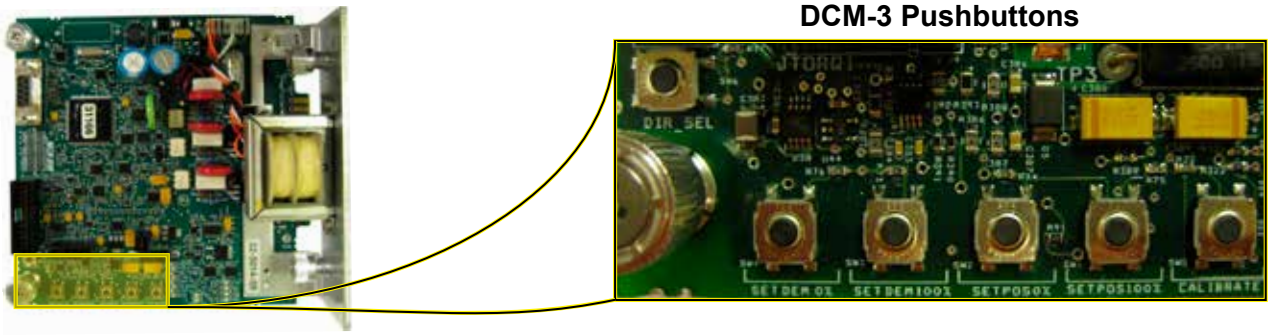

HART

The HART interface is accessible by connecting a HART capable communication device (such as a handheld communicator) to terminals AA (+) and BB (–) of the terminal block area. A HART-capable, analog output can be used for the Demand signal as well. All electronic calibration and configuration can be accomplished through the HART interface. NOTE: The appropriate HART device descriptions are required.

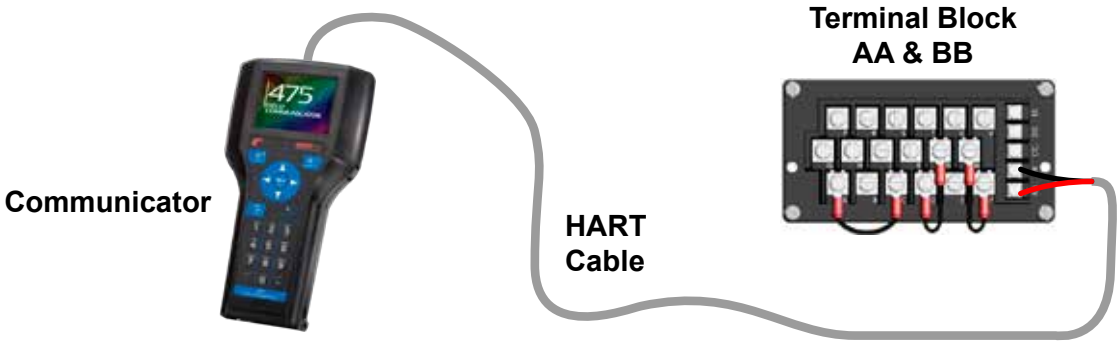

SERIAL PORT

The Serial port interface is accessible by connecting a computer to the DCM-3 using the DB9 connector. See the Serial Communications appendix for details on connecting via the Serial port. All electronic calibration and configuration can be accomplished through the Serial port interface.

ELECTRONICS

DCM-3 LAYOUT

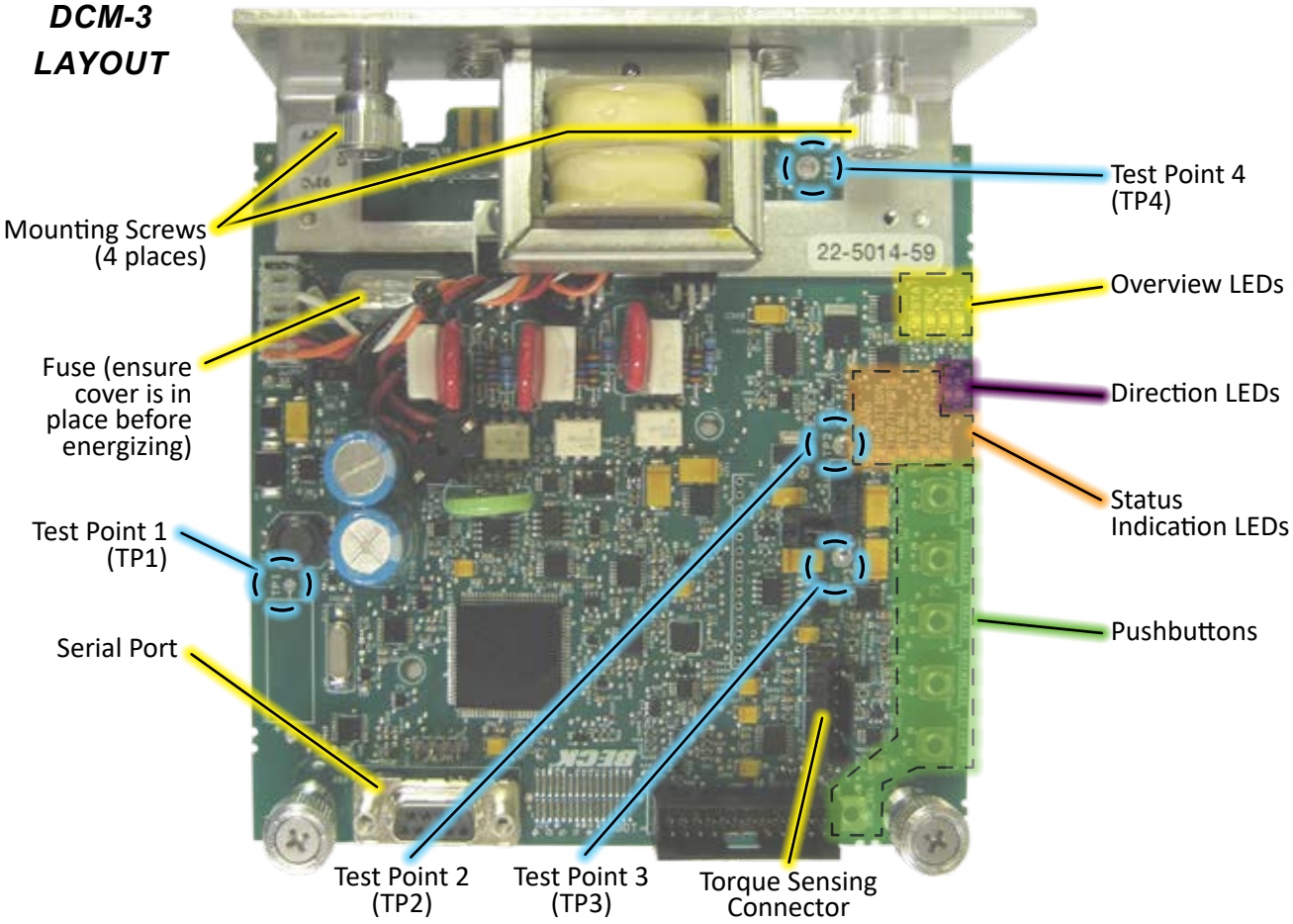

OVERVIEW LEDs

Located on the DCM-3 board (pictured above), these LEDs indicate the basic, real-time state of the actuator. A description of each LED follows.

STAT
This red LED illuminates during a system alarm. Explanation of the specific alarm is available through the Fieldbus or Serial interface. See the Troubleshooting section for additional information.

REV
This green LED illuminates when the actuator is receiving a Demand signal less than its position.

FWD
This green LED illuminates when the actuator is receiving a Demand signal greater than its position.

PWR
This green LED illuminates when power is applied to the actuator. This LED pulses from bright to dim indicating the DCM-3 is operational.

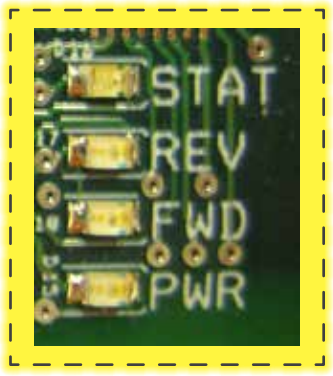

OVERVIEW LEDs

DIRECTION LEDs

These green LEDs indicate the direction of travel resulting from an increasing Demand signal.

DIRECTION LEDs

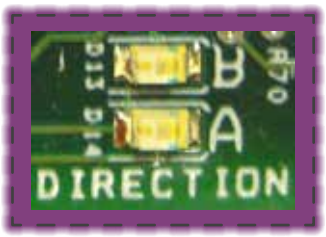

A = CCW **B** = CW

STATUS INDICATION LEDs

When the "STAT" LED is lit, the applicable red indication LED(s) will light to reveal the actuator condition(s). An alarm is also available at terminal E. When the condition is corrected, the status will automatically reset.

DEMAND
Loss of the Demand input signal.

POSITION
The Position signal to the DCM-3 is out of the calibrated range limits. The lower limit is –5% and the upper limit is 105% of the calibrated range. May also indicate a film potentiometer or internal wiring failure.

TRQ/THRST
This LED indicates that excessive thrust is present (over 105% of the actuator rating).

STALL
The actuator is in a stall condition and stall protection has been activated.

TEMP °F.
Drive's internal temperature is outside of rating.

FB OPEN
External position Feedback signal is enabled, but not wired to an external load or the wiring has failed between the actuator and the monitoring device.

STOP/LIMIT
Handswitch is in "STOP" position or the actuator is at a limit and is not in balance.

ACK
Acknowledges when a calibration procedure has been completed.

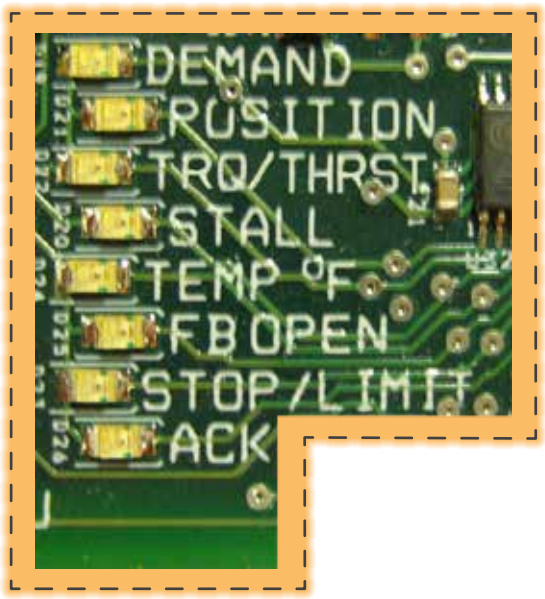

STATUS INDICATION LEDs

PUSHBUTTON CONTROLS

The five pushbuttons (pictured below) on the DCM-3 customer interface panel are used for calibration. When pressing a pushbutton, pressure should be maintained until the "ACK" LED is lit; this confirms receipt of the pushbutton command. See the Configuration/Calibration section of this manual for further explanation of calibration procedures.

CALIBRATE
This button must be pressed and held simultaneously with another pushbutton to perform a calibration.

CAUTION

Pressing the following buttons may change calibration and cause the actuator to reposition.

SET POS 100%
Press to designate the current position of the output shaft as the 100% position for actuator movement (this will correspond to a 100% Demand signal).

SET POS 0%
Press to designate the current position of the output shaft as the 0% position for actuator movement (this will correspond to a 0% Demand signal).

SET DEM 100%
Press to designate the current Demand input signal as 100% Demand.

SET DEM 0%
Press to designate the current Demand input signal as 0% Demand.

DIR SEL
Press to change the direction in which the output shaft will rotate in response to an increasing Demand signal. The opposite direction LED will light (see p.24) when the pushbutton command is confirmed.

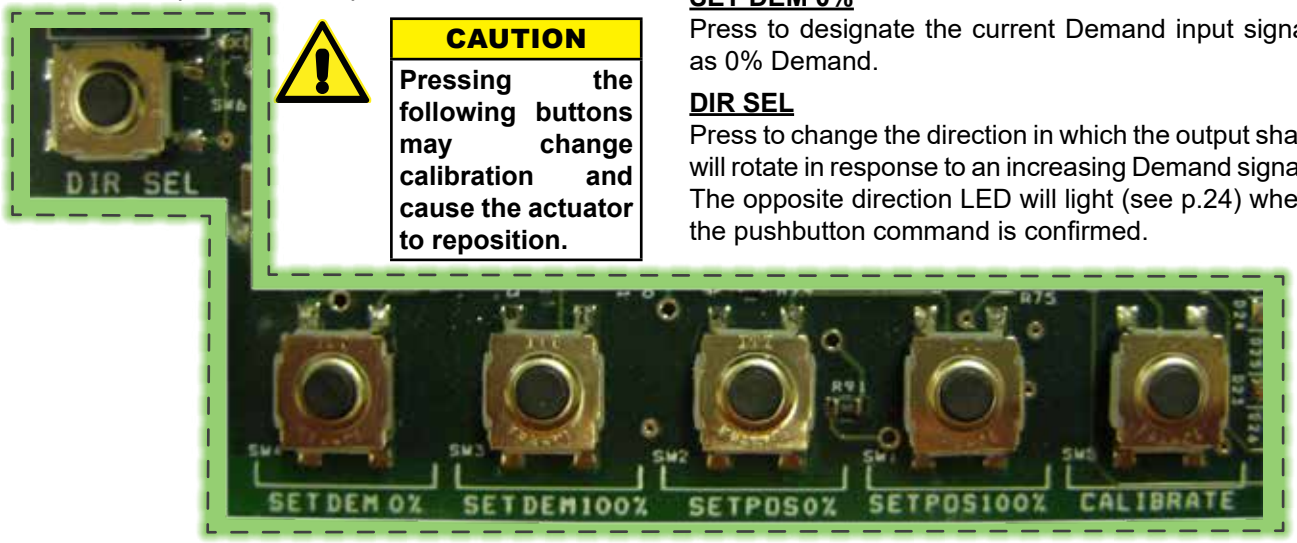

PUSHBUTTON CONTROLS

CONFIGURATION/CALIBRATION

NOTE: Beck actuators are shipped from the factory ready for installation; no electrical adjustments are required before placing it in operation. Each actuator is set up and calibrated to the specifications that were written into the equipment order.

Under normal operating conditions there is no need to recalibrate the actuator. However, if the application requirements change or are different than specified on the equipment order, the actuator should be recalibrated according to the following procedures.

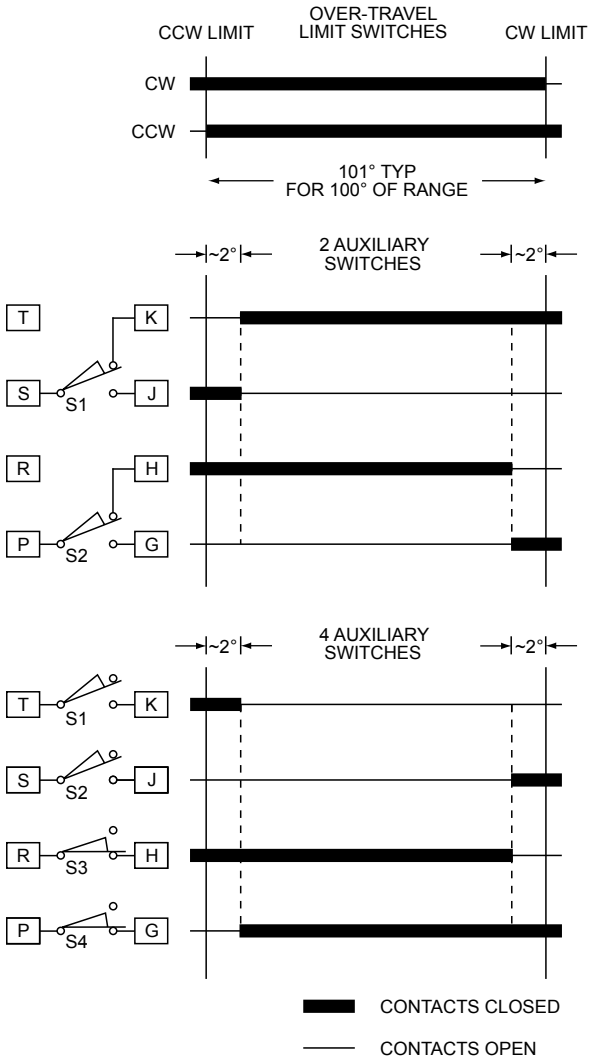

Standard Over-travel Limit and Auxiliary Switch Settings

SWITCH ADJUSTMENTS

Actuators are shipped with over-travel limit switches factory-set for 101° of travel unless otherwise specified at time of order. Limit switches must be set inside the range of the built-in, non-adjustable mechanical stops to prevent stalling of the motor. Limit switches can be reset to limit travel of the output shaft to any angle down to a minimum of 60°. Auxiliary switches are set as shown in the figure at left unless otherwise specified at time of order.

NOTE: The over-travel limit switches are the switches closest to the actuator body. To adjust the over-travel limit switches, it is necessary to remove the control end cover.

Switches are operated by cams which are clamped onto the control shaft. Setting a switch involves loosening the cam, moving the output shaft to the desired position, and positioning the cam so that it just operates the switch at that point. In the following procedure, the use of a continuity meter is recommended to determine when the switch opens or closes. If such a meter is not available, it is possible to hear the switch click as the contacts open and close.

CAUTION

Do not attach the meter or attempt to move the switch cams until the actuator is disconnected from the line voltage and auxiliary switches are disconnected from external power sources.

Setting Over-travel Limit Switches CW and CCW

This procedure should be used if the factory over-travel limit switch settings must be changed in the field. It is advisable to operate the actuator fully in each direction, using the electric Handswitch to check switch settings before attempting to change them. Follow these instructions if they require adjustment:

1. Remove the control end cover and terminal block cover (1/2" bolt heads).
2. Use the electric Handswitch to drive the control shaft so that the CW switch cam screw is accessible. Using a 7/64" hex wrench, loosen the screw so that the cam is just snug on the shaft (see illustration below).
3. Move the output shaft clockwise to the desired CW limit.

4. Turn the Handswitch to the “STOP” position.
5. ***Disconnect power from the actuator.***
6. Turn the Handswitch to the "AUTO" position.
7. Connect the continuity meter across terminals B and M. Rotate the cam until the meter shows no continuity (switch contacts open, switch clicks).
8. Tighten the cam locking screw to 5 lb-in (.56 N•m) torque.
9. Disconnect meter and turn the Handswitch to the "STOP" position.
10. Reconnect actuator power.
11. Rotate the drive’s output shaft in the CCW direction away from the CW travel limit. Note the direction of rotation of the lobe of the cam. The correct cam lobe motion is away from the switch lever with the switch lever on the lower part of the cam. If not correct, return to step 2 and reset the cam to the proper orientation.
12. Rotate the output shaft again to the desired CW travel limit. If the stopping point is reached, the switch is properly set.
13. Repeat instructions for setting CCW travel limit switch (noting that referenced directions of rotation should be opposite of those used for CW switch setting). Connect continuity meter across terminals B and N.
14. Replace covers and tighten cover bolts to 10 lb-ft (14 N•m) torque.
15. Rotate index to correspond with output shaft rotation.

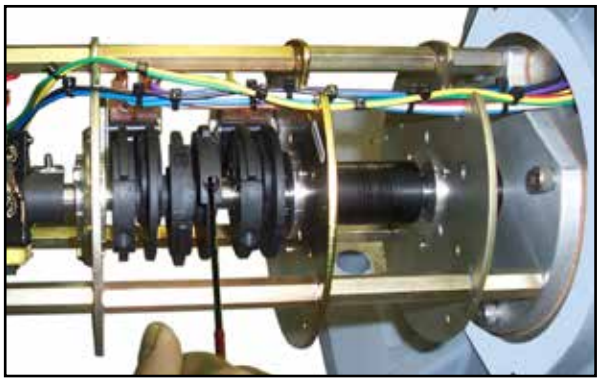

Loosening Switch Cam

Setting Auxiliary Switches

Standard switch settings for drives with 2 or 4 auxiliary switches are shown in the diagram on page 20. The heavy line indicates a closed circuit. Follow these instructions to change the operating point of auxiliary switches:

NOTE: In the following procedure, it is assumed that switch settings are to be adjusted so that contacts are open when the desired position is achieved. If they are to be adjusted to close, it may be necessary to reverse the operating mode of the switch by moving the wire lead to the other terminal on the switch itself. Be sure to disconnect power from the switch terminals first.

1. Remove the control end cover and the terminal block cover (1/2" bolt heads).
2. Use the electric Handswitch to drive the shaft so that the switch cam is accessible. Using a 7/64" hex wrench, loosen the screw so that the cam is just snug on the shaft.
3. Move the output shaft to the desired position.
4. Turn the Handswitch to the “STOP” position.
5. Disconnect power from the actuator and switch terminals.
6. Connect the continuity meter across the appropriate terminals. See the diagram on page 14 or the actuator wiring diagram. Rotate the cam to operate the switch.
7. Tighten the cam locking screw to 5 lb-in (.56 N•m) torque.
8. Disconnect the meter and reconnect power.
9. Move the actuator’s output shaft in the desired direction to verify that the cam lobe moves away from the switch lever. If not correct, return to step 2 and reset the cam to the proper orientation.
10. Replace covers and tighten cover bolts to 10 lb-ft (14 N•m) torque.

CONFIGURATION/CALIBRATION

DIRECTION OF OUTPUT SHAFT ROTATION

Rotation direction refers to the direction the output shaft of the actuator rotates in response to an increasing Demand input signal. The rotation is either clockwise (CW) or counterclockwise (CCW) as shown in the figure below. The rotation of the driven load (e.g., damper lever arm) determines the actuator rotation suitable for an application.

Unless otherwise specified at the time of order, the output shaft is factory set to rotate clockwise in response to an increasing Demand signal. The direction of rotation can be changed using one of the following three methods. NOTE: After changing the output shaft rotation, adjust the output shaft travel index to reflect the correct 0% and 100% positions.

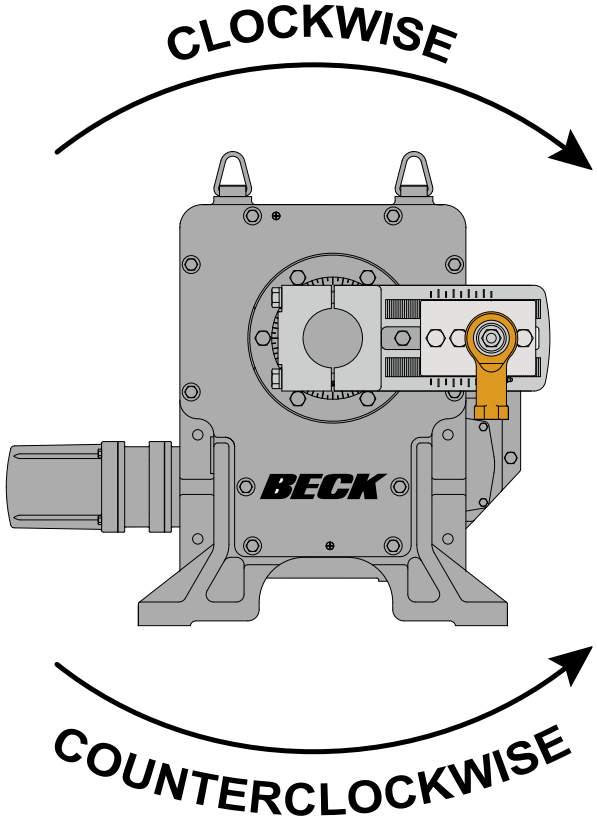

NOTE: The crank arm in the figure above may be adjusted to any start angle. The orientation and rotation shown here has been randomly selected for the purpose of this example.

Pushbutton method

1. Remove the DCM-3 cover (1/2" bolt heads).
2. Press and hold the "CALIBRATE" pushbutton, then press the "DIR SEL" pushbutton until the (opposite) "DIRECTION" LED is lit.

—OR—

2. Position the actuator at the current 0% position.
3. Press and hold the "CALIBRATE" pushbutton, then press the "SET POS 100%" pushbutton until the "ACKNOWLEDGE" LED is lit.*

—OR—

2. Position the actuator at the current 100% position.
3. Press and hold the "CALIBRATE" pushbutton, then press the "SET POS 0%" pushbutton until the "ACKNOWLEDGE" LED is lit.*
4. Ensure the actuator operates as desired.
5. Replace the DCM-3 cover and tighten the cover bolts to 10 lb-ft (14 N•m) torque. Reset travel index.

* If the "ACKNOWLEDGE" LED does not light, but the "POSITION" LED does light, the change was not accepted by the DCM-3.

NOTE: When any of the above procedures is performed, both the 0% and 100% positions are automatically set.

HART method

Command: Drive Dir

DD Menu Location: MENU 4B
Functions>Configuration>General Setup

Selections:
CW Incr - select if the desired output shaft rotation is clockwise on increasing Demand signal.
CCW Incr - select if the desired output shaft rotation is counter-clockwise on increasing Demand signal.

Serial command method

Command: drvdir *n*

Arguments: *n*
0: CW - select if the desired output shaft rotation is clockwise on increasing Demand signal.
1: CCW - select if the desired output shaft rotation is counter-clockwise on increasing Demand signal.

STEP SIZE

Step size represents the minimum amount that the Demand signal must change to initiate a change in actuator position.

When the actuator is in AUTO mode, the DCM-3 runs the motor until the output shaft position matches the percentage of Demand signal. When they match, power is removed from the motor. The Demand signal must change by the step size before power is returned to the motor.

The step size is factory set to 0.15% of full travel span, unless otherwise specified at the time of order. The step size is adjustable from 0.1% to 2.5% when the actuator is configured for 100 degrees of travel. Adjustment is typically not required. The minimum step size regardless of travel is 0.1°.

It may be advantageous in certain applications, where noise or other problems exist, to increase the step size slightly to prevent excessive modulation.

The step size can be changed using the following methods.

NOTE: Changing this parameter online could cause the actuator to reposition.

HART method

Command: StepSize

DD Menu Location: MENU 4B
Functions>Configuration>General Setup>

Enter the desired step size between "0.10%" and "2.50%".

Serial command method

Command: stepsize #.##

Arguments: #.## Desired step size (in degrees) of one incremental movement of output shaft travel. Acceptable range is between "0.10" and "2.50".

RESTORE FACTORY SETTINGS

All DCM-3's are shipped from the factory configured per the customer instructions at the time of order. A complete copy of the factory configuration is stored on the DCM-3. You can revert to the factory settings at any time using one of the following methods.

NOTE: When the factory settings are restored, the Operation Mode (HART DD menu location 3E or Serial command "opmode") will not be changed for safety reasons. The operation mode should be set to "Follow" for normal automatic operation.

HART method

Command: Restore to Factory
Running this function will restore all configurable parameters to the original factory settings.

DD Menu Location: MENU 3C
Functions> Configuration

Serial command method

Command: restoremodes *n*

Arguments: *n*

1: Used as a safety measure, the number one must be entered as an argument to prevent someone from running the restoremodes command errantly.

CONFIGURATION/CALIBRATION

TRAVEL (DEGREES ROTATION)

Travel is defined as the number of degrees of rotation by the output shaft between the 0% and 100% positions.

Unless otherwise specified, all models are factory configured for 100 degrees of output shaft rotation.

It is recommended that the maximum travel be utilized to obtain full output torque of the actuator and maximum resolution of movement. It is still possible to utilize the maximum travel of the actuator when the driven load rotation is less than 100 degrees. A free Link-Assist analysis can be provided by a Beck sales or application engineer. Link-Assist Service information is available for review on the *haroldbeck.com* website.

Some exceptional applications may require less actuator travel. Travel calibration can be performed to reduce actuator travel. Travel less than 60 degrees is not recommended.

On all models, the output shaft is limited by mechanical stops located between 106° and 108° of rotation.

It is possible to change the full travel of the actuator output shaft if necessary. To change the Beck output shaft full range of rotation, electronic calibration changes can be made by using one of the two procedures below. These procedures can be performed by using the methods that follow.

1. **0% and 100% Position Calibration**: Physically drive the actuator to the new 0% and 100% positions. Use the Pushbutton or HART method to set the new end points.
2. **Changing Travel in Degrees**: This allows the calibration to be changed without moving the actuator output shaft. Use the HART or Serial command method to set the desired full travel rotation in degrees. The 0% position will remain the same, but the 100% position will change to accommodate the new travel setting.

NOTE: In addition to recalibrating the electronics, the CW / CCW over-travel switches should also be adjusted to open just beyond the new electronic limits; this ensures that manual operation with the Handswitch will not cause over-travel or create a stall condition.

Calibrate the 0% and 100% positions:

Pushbutton method

1. Move the output shaft to the desired 0% position.
2. Press and hold the “CALIBRATE” pushbutton then press the “SET POS 0%” pushbutton until the “ACKNOWLEDGE” LED is lit.
3. Move the output shaft to the desired 100% position.
4. Press and hold the “CALIBRATE” pushbutton then press the “SET POS 100%” pushbutton until the “ACKNOWLEDGE” LED is lit.
5. Adjust over-travel limit switches as necessary to accommodate the new rotation.

SET 0% POSITION

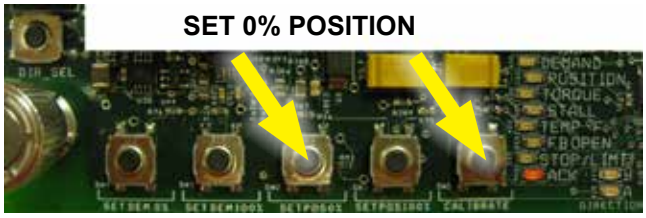

SET 100% POSITION

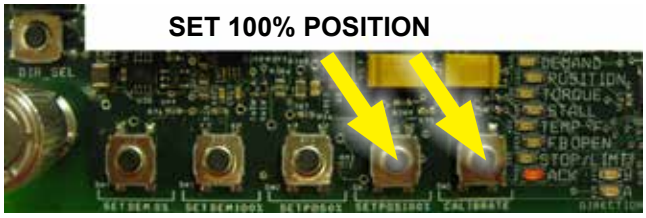

HART method

Command: Set Pos 0%
Select when the output shaft is at the desired 0% position.

Command: Set Pos 100%
Select when the output shaft is at the desired 100% position.

DD Menu Location: MENU 4C
Functions>Configuration>PositionSensrSetup>

Change Travel Degrees:

HART method

Command: Travel
Enter the desired full stroke rotation in degrees.

HART DD Menu Location: MENU 4B
Functions>Configuration>General Setup>

Serial command method

Command: travel ###

Arguments: ### The desired full-stroke rotation in degrees.

DEMAND CALIBRATION

DCM-3 boards are designed to accept a 4–20 mA (or 1–5 V dc) analog Demand signal. The input comes calibrated from the factory for the full range unless otherwise specified by the customer. It is not necessary to calibrate the Demand input when the actuator is installed; however, if the Demand needs to be calibrated to accommodate unusual operating conditions, two guidelines must be followed: First, the value for 0% must be greater than 0.5 mA and the value for 100% must be less than 21 mA. Second, the difference between 0% and 100% (minimum span) must be at least 4 mA. Use any of the following methods to calibrate Demand. Actuators may also be configured for split-range operation—contact the factory for details.

Calibrate the 0% and 100% Demand signal:

Pushbutton method

1. Ensure the Handswitch is in the "STOP" position. This will prevent the actuator from repositioning during this procedure.
2. Apply the desired 0% Demand input signal to the actuator (e.g., 4 mA for 4–20 mA signal).
3. Press and hold the "CALIBRATE" pushbutton, then press the "SET DEM 0%" pushbutton until the "ACKNOWLEDGE" LED is lit.*
4. Apply the desired 100% Demand input signal to the actuator (e.g., 20 mA for 4–20 mA signal).
5. Press and hold the "CALIBRATE" pushbutton, then press the "SET DEM 100%" pushbutton until the "ACKNOWLEDGE" LED is lit.*
6. Turn the Handswitch to the "AUTO" position. NOTE: The actuator may reposition.
7. Run the actuator through its full operational range to ensure proper response to the Demand input signal.
8. Replace the compartment covers and tighten the cover bolts to 10 lb-ft (14 N•m) torque.

*If the "ACKNOWLEDGE" LED does not light, but the "Demand" LED does light, the calibration is out of acceptable range and was not accepted by the DCM-3. This is typically caused by trying to set 0% and 100% values too close together (i.e., less than 4 mA difference).

SET 0% DEMAND

SET 100% DEMAND

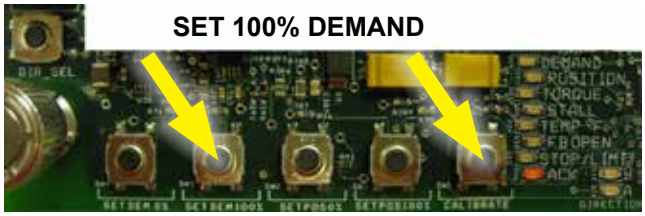

HART method

Command: DemRngLwr
Enter the desired 0% Demand signal ("4.00" to "16.00" mA).

Command: DemRngUpr
Enter the desired 100% Demand signal ("8.00" to "20.00" mA).

DD Menu Location: MENU 4D Functions>Configuration>Demand Setup>

Serial command method

Command: dem0pctma **#.##**

Arguments: #.## Desired 0% Demand signal ("4.00" to "16.00" mA).

Command: dem100pctma #.##

Arguments: #.## Desired 100% Demand signal ("8.00" to "20.00" mA).

CONFIGURATION/CALIBRATION

LOSS OF DEMAND SIGNAL (LOS)

The DCM-3 is capable of determining if the Demand input signal to the actuator is outside of an acceptable range. The DCM-3 uses a configurable loss of signal (LOS) threshold to determine if the Demand signal falls below a minimum value. Unless otherwise specified in the original order, the factory-set threshold is 3.2 mA. When the DCM-3 senses an LOS condition, an alarm condition will result, illuminating the "Demand" status indication LED. The actuator then responds according to the LOS setting. The DCM-3 can be configured for one of two LOS actions:

1. **Stay in Place**—the actuator output shaft stays in place until the Demand signal returns to the acceptable range. This is the factory default.
2. **Go-to-Position**—the actuator output shaft will move to a preset position, designated in percentage of travel. For example, if the LOS action is set for 50%, the actuator output shaft will drive to the 12 mA position (based on a 4-20 mA span).

The LOS parameters can be configured using HART or Serial commands.

CAUTION

The following procedures could cause the actuator to reposition, which can adversely affect the process and cause potentially dangerous conditions.

Configure the LOS threshold:

HART method

Command: DemLimLwr
Enter "0.00" to "12.00" mA. Decimal value of the lower threshold for detecting LOS. (e.g., the typical value for a 4–20 mA system is "3.20").

DD Menu Location: MENU 4D
Functions>Configuration>Demand Setup>

Serial command method

Command: demlos ###

Arguments: ### Enter the desired Demand signal in mA below which LOS occurs (e.g., the typical value for a 4–20 mA system is "3.20").

Configure the LOS mode:

HART method

Command: LOS Mode

DD Menu Location: MENU 4D
Functions>Configuration>Demand Setup>

Selections:

Stay - select if the actuator should hold output shaft position when a loss of signal occurs.

Go-to-Pos - select if the output shaft should go to a specific position when a loss of signal condition occurs. Configure the position with LOS Pos.

Serial command method

Command: demlos *n*

Arguments: *n* Enter the desired mode

sip: (actuator will stay in place).

gtp: (actuator will go to position set in "demlosgtp" command)

pat: (same as "sip", but suppresses the alarm).

Configure the LOS position when Go-to-Pos is selected:

HART method

Command: LOS Pos
Enter "-5.00%" to "105.00%". The percentage of full travel the actuator will move upon LOS.

DD Menu Location: MENU 4D
Functions>Configuration>Demand Setup>

Serial command method

Command: demlosgtp ##.##

Arguments: ##.## Desired position of actuator if "gtp" is selected in "demlos". Position is expressed as a percentage of actuator travel in decimal form (e.g., 50% = "50.00").

Command: demlosgtp delay *n*

Arguments: *n* Time delay in seconds before the actuator will move to the position set in "demlosgtp" (0 to 25.5 seconds). Default is "0".

Entering this command without an argument will return the present GTP and delay settings.

DEMAND CHARACTERIZATION CURVES

The DCM-3 can be configured to interpret the applied Demand signal for linear or non-linear output shaft position response. Three predefined Demand signal response curves are available for use including: Linear, Square, and Square Root. A chart of each of these predefined responses is provided for your reference.

In addition to the three predefined characterizer curves, the DCM-3 also allows a custom user-defined curve to be configured. This option is called "Dem Curve Spcl".

The Demand characterization curve type can be configured with the following methods.

Change the Demand characterization curve:

HART method

Command: Dem Curve

DD Menu Location: MENU 4D
Functions>Configuration>Demand Setup

Selections:
Linear - select if the actual position % should match the applied Demand %.

Square Root - select if the actual position % should match the square root of the applied Demand %.*

Dem Curve Spcl - select if a user-defined response is desired (see characterization on the following page to define the desired response curve).

Square - select if the actual position % should match the square of the applied Demand %.

Serial command method

Command: demfunc *n*

Arguments: ***n*** Enter the integer that represents the desired Demand signal response as follows:

0: Linear - select if the actual position % should match the applied Demand %.

1: Square Root - select if the actual position % should match the square root of the applied Demand %.

4: Special Curve - select if a user-defined response is desired (see characterization on the following page to set the desired response curve).

5: Square - select if the actual position % should match the square of the applied Demand % (e.g., "demfunc 0" sets the actuator to a linear Demand response).

DEMAND SIGNAL RESPONSE CURVES

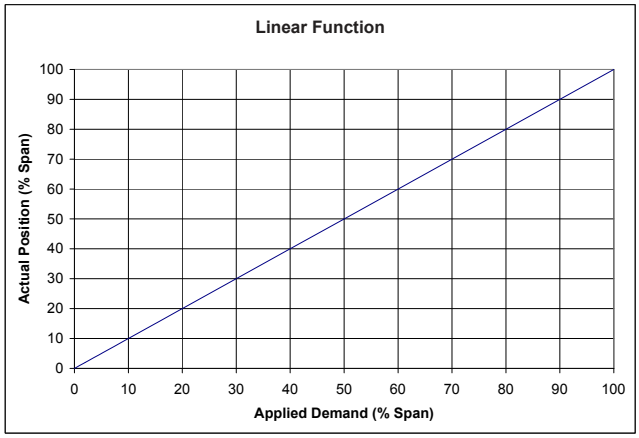

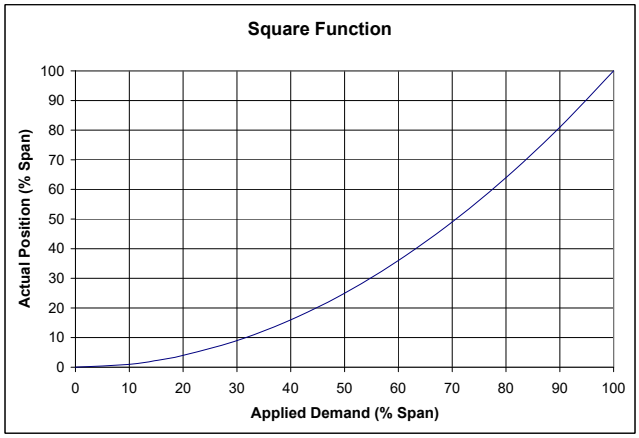

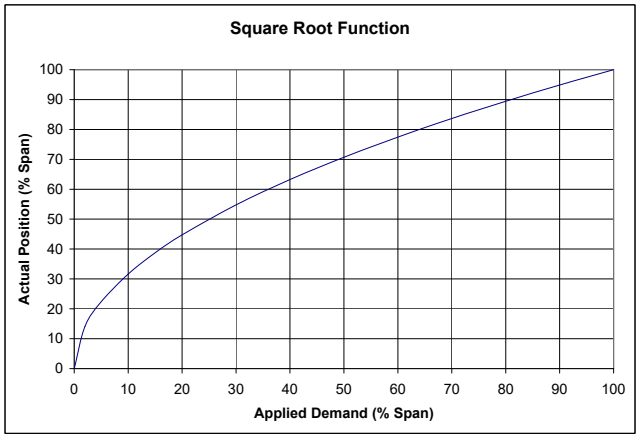

***NOTE**

Implementing a square root characterization creates extremely high gain when the Demand signal is below 10%; this causes instability and is unsuitable for control at this level. Do not apply this curve if the control loop may need to modulate at the lower range of travel.

CONFIGURATION/CALIBRATION

USER-DEFINED CHARACTERIZATION

Special curves may be created from up to 20 segments, each of which has a node for a starting point and a node for an ending point. All 20 segments do not have to be used, but the used segments must be grouped together starting with segment 1. Segments cannot be skipped.

A node is a coordinate comprised of an X,Y point. When defining nodes, X-values and Y-values must increase as the node number increases. For example, the X-value and Y-value of node 2 must be higher than the X-value and Y-value of node 1. Nodes cannot be skipped. Always start at node 1.

Unless otherwise specified, the Special curve ships from the factory defined as a linear function (i.e., one segment beginning with node 1 at X = 0%, Y = 0% and ending with node 2 at X = 100%, Y = 100%). X-values are typically chosen to give a reasonable spacing in Y-values.

The customer may specify a custom characterization by entering X- and Y-value pairs to define line segments between 0% and 100%.

For example, the table at right uses 5 segments to approximate the square function curve (i.e., $y=x^2$). Segments 1 through 5 are needed, so nodes 1 through 6 are used.

The following methods can be used to configure a user-defined characterization curve.

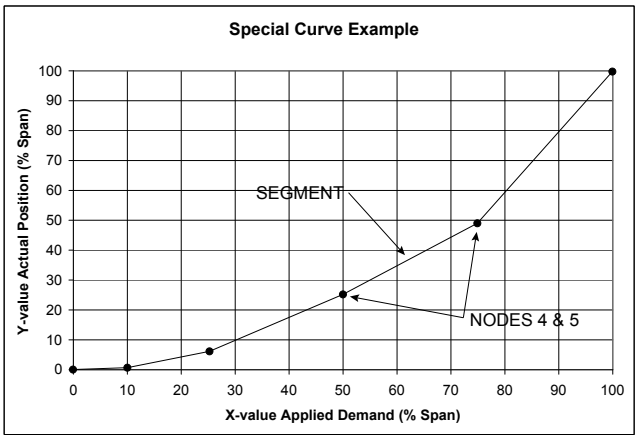

NODE	X-VALUE (DEMAND) % SPAN	Y-VALUE (POSITION) % SPAN
1	0%	0%
2	10%	1%
3	25%	6%
4	50%	25%
5	75%	49%
6	100%	100%

Change the user-defined characterization:

HART method

Command: DemNode1X
Enter desired X-value as a percentage for node 1

Command: DemNode1Y
Enter desired Y-value as a percentage for node 1

Repeat above procedures for each node required.

DD Menu Location: MENU 5A
Functions>Configuration>Demand Setup>Dem Curve Spcl

Serial command method

Change the user-defined characterization:

Command: charset *n1, n2, n3*

Arguments: ***n1, n2, n3***
Where:
n1 = node number.
n2 = X-value as a percentage.
n3 = Y-value as a percentage.
Values must be separated by commas as shown.
Repeat procedure for each node required.

View the user-defined characterization:

Command: charlist ###

Arguments: ### Enter node number between 1 and 21 or "all".
Displays defined nodes.

Clear the user-defined characterization:

Command: charclear ###

Arguments: ### Enter node number between 1 and 21.
Clears a defined node by setting it to unused.
Will also clear any node numerically higher.

POSITION FEEDBACK SIGNAL

DCM-3 control electronics provide a 4–20 mA analog output signal that represents the actuator output shaft position. The DCM-3 monitors an internal position voltage from the CPS-5, controls the actuator position, and sources a 4–20 mA signal to terminals DD (–) and EE (+). The Feedback will correspond with the 0% and 100% output shaft positions, as determined by the position calibration. **There is no need for separate Feedback calibration.**

The user has the option of enabling or disabling the position Feedback signal. The factory default configuration will have the Feedback enabled. When the Feedback is enabled, but not in use (i.e., not wired to a load) the "STAT" and "FB OPEN" LEDs will illuminate. This status alarm is helpful in alerting the user to open Feedback wiring, but can be a nuisance when the Feedback is purposely disconnected or unused. Disabling the Feedback signal turns off the output and eliminates the status alarm. If HART or Serial communications are not immediately available to disable the Feedback signal, you can apply a 250 ohm load resistor across the Feedback terminals DD (–) and EE (+) to simulate a Feedback loop and eliminate the alarm.

Use the HART or Serial Commands (detailed on the next page) to set the Feedback signals and corresponding output shaft positions as detailed below.

If desired, the milliamp position Feedback values for 0% and 100% positions can be configured differently than the respective standard factory calibration of 4 mA and 20 mA. A valid 0% position Feedback signal value can be configured anywhere in a 3–16 mA range, while a 100% signal value can be configured from 7–21 mA. The 100% milliamp value must exceed the 0% value by at least 4 mA.

Also, reversed (decreasing direction) Feedback may be selected so that the position resulting from a 4 mA Feedback signal corresponds to the position typically resulting from a 20 mA signal; e.g., 4 mA = 100% position and 20 mA = 0% position. Setting the 0% position to 20 mA will automatically set the 100% position to 4 mA (and vice-versa), and will activate the reverse (decreasing) Feedback function. After accepted, these settings may then be changed as detailed in the paragraph above, only opposite; i.e., a valid 0% position Feedback value is 7–21 mA, while a 100% position may be set at 3–16 mA. The difference between the values can be no less than 4 mA and no greater than 18 mA.

The factory calibrated relationship between the position Feedback signal and the output shaft position is linear (i.e., 0% to 100% Feedback signal corresponds directly with 0% to 100% shaft position). This relationship is suitable for most applications; however, the Feedback to Demand relationship can be changed to compensate for characterized Demand signals. This relationship is called “Inverse Demand”. Configuring this option allows the position Feedback signal to match the uncharacterized Demand signal rather than true output shaft position.

The following example assumes 4–20 mA Demand and position signals. If the Demand is set to a square characterization, then a 12 mA Demand corresponds to 25% position. If the position Feedback curve is set to linear, then Feedback at 25% is 8 mA. For some control systems, having the Demand at 12 mA and the Feedback at 8 mA may cause a deviation alarm. The Feedback curve can be set to "Inverse Demand" so the Demand and Feedback match when the actuator is balanced. In this example, with Feedback set to "Inverse Demand" and the output shaft position at 25%, the Feedback signal would be 12 mA.

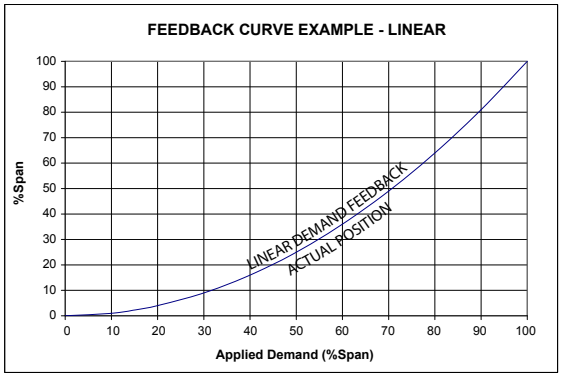

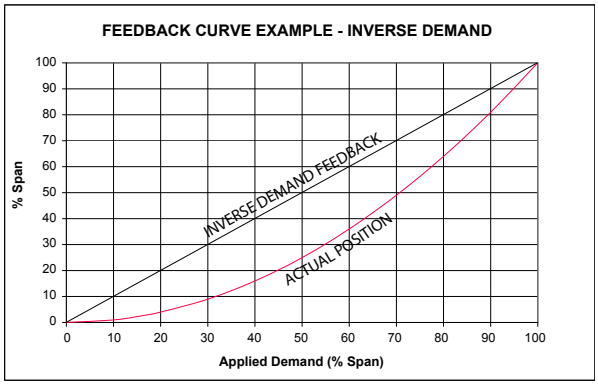

CONFIGURATION/CALIBRATION

The following methods describe how to enable or disable position Feedback, set the 0% and 100% milliamp values and select the desired Feedback response.

Enable/disable the position feedback:

HART method

Command: Feedback

DD Menu Location: MENU 4E
Functions>Configuration>Feedback Setup>

Selections:

Enabled - to enable position Feedback.

Disabled - to disable position Feedback.

Serial command method

Command: iomode *n*

Arguments: *n*

0: Feedback disabled.

1: Feedback enabled.

Set the feedback range lower and upper values:

HART method

Command: FB RngLwr
Enter the milliamp value that corresponds with 0% position. Acceptable range "3.00"–"16.00" (typically, "4.00").

Command: FB RngUpr
Enter the milliamp value that corresponds with 100% position. Acceptable range "7.00"–"21.00" (typically, "20.00").

DD Menu Location: MENU 4E
Functions>Configuration>Feedback Setup>

Serial command method

Command: fdbk0pctma #.##

Arguments: #.## Desired Feedback signal in mA at 0% output shaft position. Minimum value is "3.00". The value limit may be no less than "3.00" or, if reversed (decreasing direction), no greater than “21.00”.

Command: fdbk100pctma #.##

Arguments: #.## Desired Feedback signal in mA at 100% output shaft position. The value limit may be no greater than "21.00" or, if reversed (decreasing direction), no less than “3.00”.

Set the feedback characterization curve:

HART method

Command: FB Curve

DD Menu Location: MENU 4E
Functions>Configuration>Feedback Setup>

Selections:

Linear - to enable a linear feedback signal

InvDem - to enable an inverted Demand feedback signal.

Serial command method

Command: fdbkfunc *n*

Arguments: *n*

0: Linear Feedback signal.

1: Inverse Demand Feedback signal.

TORQUE SENSING (Optional)

Torque sensing is an optional feature that measures the output torque of the actuator as a percentage of its rated torque capability. It provides a number of configurable features including live torque measurement, historical peak torque data, overtorque alarm and overtorque protection. Torque sensing cannot be retrofitted into existing actuators.

Actuators equipped with optional torque sensing are calibrated at the factory. There should never be a need to calibrate the torque measurement; however, if the DCM-3 is ever replaced, the torque sensing calibration constants will need to be set. There are two calibration constants consisting of a torque signal null (zero) and a torque signal span. These constants are unique to the actuator and are printed on a label inside the DCM compartment. If these values are no longer legible, contact the factory with the actuator serial number and the constants can be provided.

Although actuators are shipped from the factory with torque sensing enabled, the overtorque protection feature is disabled. Torque sensing and overtorque protection can be either enabled or disabled, as desired. In addition, the torque alarm threshold value can be changed, as can the overtorque protection threshold.

The following methods allow the user to enable/disable torque sensing, set the torque null, and set the torque constant. Methods for using and configuring the other torque features also follow:

Enable / disable torque sensing:

HART method

Command: Trq/Thrust

DD Menu Location:MENU 4F
Functions>Configuration>Torque Setup>

Selections:

Enabled - to enable torque sensing.

Disabled - to disable torque sensing.

Serial command method

Command: torqenable *n*

Arguments: ***n***

0: disables torque sensing and torque alarm.

1: enables torque sensing and torque alarm.

Set the torque null and constant values:

HART method

Command: Trq Null
Number representing 0% torque. Enter the torque null value that is affixed to the actuator body inside the terminal compartment.

Command: Trq Const
Number representing the torque span value. Enter the torque constant value that is affixed to the actuator body inside the terminal compartment.

DD Menu Location:MENU 4F
Functions>Configuration>Torque Setup>

Serial command method

Command: torq0k ###

Arguments: ### Number representing 0% torque. Enter the torque null value that is affixed to the actuator body inside the terminal compartment.

Command: torqconst **###**

Arguments: ### Number representing the torque span value. Enter the torque constant value that is affixed to the actuator body inside the terminal compartment.

LIVE / HISTORICAL TORQUE

The live torque measurement can be accessed through the HART or serial port interface. Historical peak measurements are recorded for 10 equal segments of travel in both the CW and CCW travel directions. Historic data is also available through the HART or serial port interface.

View the live torque measurement:

HART method

Command: Trq/Thrust
Displays the present torque reading as a percentage of the actuator's rated torque.

DD Menu Location: MENU 1

Serial command method

Command: torq
Displays the torque on the output shaft measurement as a percentage of actuator rating.

Arguments: No argument required.

CONFIGURATION/CALIBRATION

View historical peak torque values:

HART method

Command: Segment 1 through 10
Displays the historical peak torque values. Values are displayed for every 10% segment of full actuator travel and also for both the CW and CCW directions of travel.

DD Menu Location: MENU 4J
Functions>Diagnostics>CW Torque

DD Menu Location: MENU 4K
Functions>Diagnostics>CCW Torque

Serial command method

Command: torqprof

Displays a three table column:
1. Travel divided into 10 segments
2. peak torque measured in each segment with motor running CW
3. peak torque measured in each segment with motor running CCW

Arguments: No argument required.

OVERTORQUE PROTECTION
(Requires Optional Torque Sensing)

Overtorque protection protects both the actuator and driven equipment from damage when the torque exceeds the set threshold (configurable). Actuators normally ship from the factory with this feature disabled, but it can be enabled in the field using either HART or the serial interface. The factory configured threshold is 150% of rated actuator torque, and can be configured as low as 70%.

The following methods show how to enable/disable the overtorque protection and how to set the threshold.

Enable / disable overtorque protection:

HART method

Command: Ovt Prot

DD Menu Location:MENU 4F
Functions>Configuration>Torque Setup>

Selections:

Enabled - to enable overtorque protection.

Disabled - to disable overtorque protection.

Serial command method

Command: ovtstop *n*

Arguments: ***n***

0: disables overtorque protection.

1: enables overtorque protection.

Set the overtorque protection threshold:

HART method

Command: ShutDwnTrq
Enter the overtorque protection threshold as a percentage of rated torque (70%–150%).

DD Menu Location:MENU 4F
Functions>Configuration>Torque Setup>

Serial command method

Command: ovtstoplevel ###

Arguments: ### the overtorque protection threshold as a percentage of rated torque (70% to 150%).

OVERTORQUE ALARM
(Requires Optional Torque Sensing)

When the torque reaches an alarm threshold (factory configured for 105% of rated torque), a status alarm will be initiated causing the STAT LED to illuminate. Disabling the torque sensor also disables the torque alarm. When the measured torque drops below the threshold the status alarm is automatically reset.

The following method allows the user to set the torque alarm threshold between 61% and 105%.

Set the torque alarm threshold:

HART method

Command: AlarmLevel
Enter the alarm level as a percentage of torque (61%–105%).

DD Menu Location:MENU 4F
Functions>Configuration>Torque Setup>

Serial command method

Command: torqalarm **###**

Arguments: ### Alarm level as a percentage of torque (61%–105%).

TEMPERATURE SENSING

DCM-3s are equipped with an internal temperature sensing circuit. The real-time temperature and the historical temperature extremes (low and high) are available.

Temperature units can be selected to show either Fahrenheit or Celsius.

An alarm condition initiates if the actuator's real-time temperature falls outside the actuator rating (see "General Specifications", page 4). The STAT LED and the TEMP F LED will light, and will automatically reset when the temperature is once again within the actuator rating.

View real-time temperature & historical extremes:

HART method

Command: Temp
Displays the real-time temperature as read by the DCM-3.

DD Menu Location: MENU 1

Command: High Temp
Displays the historical high temperature.

Command: Low Temp
Displays the historical low temperature.

DD Menu Location: MENU 3D
Functions>Statistics

Serial command method

Command: temperature

Arguments:

When entered with no argument, the command returns the real-time temperature as well as the historical high and low temperatures.

Set temperature units:

HART method

Command: Temperature Unit

DD Menu Location: MENU 4B
Functions>Configuration>General Setup

Selections:

degF - Set the temp. units to degrees Fahrenheit.

degC - Set the temp. units to degrees Celsius.

Serial command method

Command: temperature *n*

Arguments: *n*

F: Set the temp. units to degrees Fahrenheit.

C: Set the temp. units to degrees Celsius.

CONFIGURATION/CALIBRATION

STALL PROTECTION

The DCM-3 board provides protection for the actuator in the event of a stall. Stall protection is activated when the actuator is unable to achieve the proper position within a defined stall time due to a mechanical impediment or excessive load.

The DCM-3 senses when the motor moves the output shaft in one direction longer than the configured “stall time”. The DCM-3 then shuts off power to the motor, preventing further actuator movement. When the stall condition occurs, the STAT LED will illuminate.

Resetting due to a stall condition is achieved by reversing the Demand signal, cycling the actuator power, or submitting a reset command via HART or Serial port.

The stall protection feature can be enabled or disabled and the stall time may be configured between 30 and 450 seconds. This feature is factory enabled and the default setting is 300 seconds. If reconfiguring, it is advisable to configure the stall time with a value greater than the maximum stroke time to avoid false stall protection events and alarms.

Enable / disable stall protection:

HART method

Command: StallProt

DD Menu Location: MENU 4B
Functions>Configuration>General Setup>

Selections:

Enabled - to enable stall protection.

Disabled - to disable stall protection.

Serial command method

Command: stallprot *n*

Arguments: *n*

0: stall protection disabled.

1: stall protection enabled.

Configure the stall time:

HART method

Command: Stall Time
Enter the stall time in seconds. Valid stall times are 30 to 450 seconds.

DD Menu Location: MENU 4B
Functions>Configuration>General Setup>

Serial command method

Command: stalltime ###

Arguments: ### Enter the stall time in seconds. Valid stall times are "30" to "450".

Reset a stall condition:

HART method

Command: Reset Stall
Select to reset a stall condition.

DD Menu Location: MENU 3E
Functions>Manual Operation>

Serial command method

Command: unstall
Enter to reset a stall condition.

MAINTENANCE

MOTOR ASSEMBLY

The control motor is not field-repairable. **Do not disassemble the motor.** Disassembly of the motor will result in a loss of torque that can only be restored by returning the motor to the factory for re-magnetizing.

Motor assembly replacement instructions follow:

WARNING

Disconnect power before proceeding.

Before removing the motor assembly, block the crank arm to prevent the crank arm and gear train from moving when the motor is removed.

REMOVE THE MOTOR ASSEMBLY:

First disconnect the motor wires in the terminal compartment of the actuator. The terminal block and barrier plate should be removed from the actuator body as an assembly to access the wires beneath.

After lifting the barrier plate assembly, the three motor wires may now be disconnected. Remove the black motor wire from the terminal “B” post, cut the red motor wire near the red-yellow-red butt joint and disconnect the green wire from the motor capacitor. Remove the mounting screws and then carefully slide the motor assembly out of the actuator body.

INSTALL THE NEW MOTOR ASSEMBLY:

First, insert the three-wire sleeve through the wire hole in the motor mount and into the terminal compartment. Carefully slide the motor into the actuator body. Rotate the motor shaft, if necessary, to engage the pinion with the first combination gear. Install new motor assembly mounting screws (provided) and torque to 16 lb-ft (22 N•m). Reconnect the motor wires per your actuator specific wiring diagram (under terminal compartment cover).

Inspect the barrier plate gasket and replace if necessary (see GASKETS in this section). To ensure a watertight seal between the plate and gasket, coat the gasket with a thin film of grease before replacing the terminal plate. Torque the screws to 3 lb-ft (4 N•m).

MOTOR RESISTOR AND CAPACITOR NETWORK

There is no recommended replacement interval for the motor resistor or capacitor. Nonetheless, it may be advisable to replace these parts as a preventative measure when motors are replaced on older actuators; this is why they are recommended spare parts.

The R/C values and part numbers for each motor assembly are shown in the Table on page 44. The resistor and capacitor are located in the wiring compartment below the terminal block.

WARNING

Electrical shock hazard. Disconnect power before proceeding.

To replace a resistor or capacitor, remove the terminal block and barrier plate as an assembly to access the resistor and capacitor components. The capacitor(s) is fastened to the actuator body wall with a bracket and screws. The resistor assembly plate is also fastened to the body wall with screws. After removing the mounting screws (and bracket, if necessary), remove the existing part and transfer the wires one at a time from the existing part to the new replacement part (in some configurations, access to the screws may require removal of the DCM-3 compartment cover). Fasten the new parts in the same manner as the replaced parts.

Inspect the terminal plate gasket and replace if necessary (see GASKETS in this section). To ensure a watertight seal between the plate and gasket, coat the gasket with a thin film of grease before replacing the terminal plate. Torque the screws to 3 lb-ft (4 N•m).

LUBRICATION / GEARING

It is recommended that during major outages, drives be inspected to determine the need to relubricate the actuator gear train. It is also recommended that the linkage rod ends be lubricated at this time to extend life.

If your 11-439 was provided in Orientation A and the gear module assembly is accessible (see p. 6), follow the directions below. If your 11-439 was provided in Orientation B (see p. 7) or the gear module assembly is not accessible, the actuator may need to be separated from the gear reduction unit—please contact the factory for details.

CAUTION

Before attempting to remove the actuator from the gear reduction unit, contact the factory for details.

Remove the gear module assembly. Remove the gears from their shafts and clean them thoroughly, removing all old lubrication.

Examine the gear teeth, shaft bore, and gear shafts for signs of excessive wear, scoring, or other damage. If evidence of this damage is present, the actuator should be returned to the factory for a detailed examination of the main gear, which requires complete disassembly of the drive. See "HOW TO OBTAIN SERVICE" on page 67.

If there is no evidence of damage to the gearing, recoat the teeth and shaft bores of all gears with a heavy layer of Fiske Lubriplate GR-132 or equivalent (GR-132 is an E.P. grease with polymer additives). The ball bearing on the output shaft and crown gear shaft have double grease seals and require no maintenance for the life of the bearings. Inspect all grease seals and replace any that show wear. Replace the gear module assembly.

To inspect the gears on the gear reduction unit, remove the gear inspection plug (see photo at right for location). If possible, move the output shaft to the full CW or CCW limit of travel. This will expose the gear teeth in use on the output gear. Turn the Handswitch to the STOP position. Recoat the gear teeth with a heavy layer of Fiske Lubriplate GR-132 or equivalent. Replace the gear inspection plug.

GEAR INSPECTION PLUG

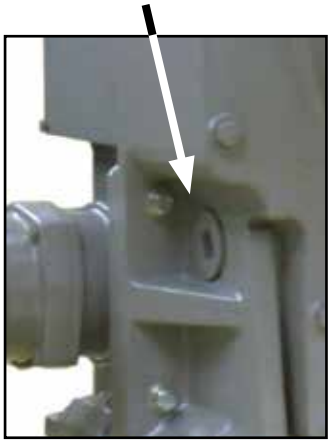

SELF LOCKING MECHANISM (SLM)

The Self Locking Mechanism (SLM) is assembled to the front of the motor and couples the motor to the gear train. The primary function of the SLM is to lock the gear train in place when the motor is de-energized and, when energized, allow the motor to drive the gearing.

There is no recommended maintenance interval for the SLM. The SLM can last for many years in normal service. SLM wear is a function of loading and the number of starts/stops the motor experiences over time. Overloading or stalling the actuator will accelerate SLM wear.

Signs of wear include the inability of the actuator to hold position when the motor is de-energized. This could result in persistent on-off oscillation. Severe SLM wear or damage may result in a loss of torque at the output shaft.

It is often possible to confirm SLM wear or damage by checking motor operation with the Handwheel. Place the Handswitch in the STOP position, and rotate the motor Handwheel back and forth. There should be free play before the motor pinion/gearing turns (up to one tenth of a full Handwheel rotation). Lack of free play or rough motor movement may indicate the need for SLM reconditioning.

SLM REBUILD KITS

Motor Assembly	**20-2201-31, -32, -33**	**20-2201-35**
Rebuild Kit GL181-134	**12-8067-13**	**12-8067-14**
Spring	14-9980-26	
Friction Material GL181-134	14-9490-52	
Spring Pin	10-7111-05	
Stop Collar	N/A	
Thrust Washer/ Bearing	14-9400-02	
Pinion	14-9940-17	14-9701-12
Steel Ball	14-9420-03 (8)	
Locking Disc	14-9330-19	
Steel Shim	N/A	
Steel Shim	N/A	
Motor Gasket	20-0660-08	
Instruction Sheet	80-0016-02	
Terminal Joint	20-0032-01 (3)	
Slip-on Terminal	20-0030-01	
Spacer	20-2090-03	20-2311-07
O-ring	14-9840-16	
Motor Screw	30-0306-40 (4)	

Disassembly and close inspection of the SLM components is required to fully evaluate its condition.

WARNING

Electrical shock hazard. Disconnect power before proceeding.

Support the load before removing the motor/SLM from the actuator.

DISASSEMBLY AND CLEANING

When wear or damage is suspected, disassembly and cleaning may be required to determine the extent of needed repairs. Individual parts may be replaced, with the exception of the drive collar, which is not field replaceable. Refer to the illustration, next page.

NOTE: To prevent bending of the motor shaft, support the end of the shaft when removing or installing the spring pin.

1. Disconnect power from the actuator.
2. Secure the actuator load, and remove the motor assembly (see page 35). Handle the motor with care so as not to damage the rotor shaft.
3. Pushing down firmly on the pinion, measure the gap between the stop collar and the thrust washer. This distance should measure 0.025 ± .005". An excessive gap indicates worn SLM components.
4. Use a felt tip pen to mark the location of the stop collar on the shaft. Support the end of the rotor shaft to prevent it from bending, and drive out the 1/8" spring pin. Carefully (the assembly is spring-loaded), unthread the stop collar and remove the thrust washer/bearing, spacer, pinion, spring and steel balls. Remove the (4) 1/4-20 screws and the front motor end (see illustration, next page). DO NOT remove the front motor shield or the rotor from the stator on any model.

CAUTION

Do not disassemble the motor any further, as it has no other user serviceable parts. Further disassembly will result in demagnetization of the motor and loss of the required torque.

MAINTENANCE

Replacement & Rebuild (cont'd)

5. Clean grease from the pinion and locking disc for inspection. A small amount of dust residue from the friction material is normal. Clean the drive collar detents with a rag and inspect for wear. Inspect the friction material for excessive wear or damage. If the friction material does not appear to be damaged, clean with alcohol to remove any contaminants.
6. Identify worn parts and replace as needed. Note, wear on the pinion teeth may indicate wear on the meshing gear. Further inspection of the gear module assembly is recommended. Drive collar detent wear will require factory repair of the motor.

REPLACEMENT AND REBUILD INSTRUCTIONS

1. Inspect the friction material for excessive wear or damage. If the material appears to be in good shape, skip to the next paragraph. The friction material typically will not require replacement and, if contaminated, can be cleaned with denatured alcohol. However, if the material appears damaged or excessively worn, remove the old friction material and clean the bonding surface. Glue the new friction material in place with Loctite 454 Instant Adhesive (or equivalent), taking care to keep the material flat and clean.
2. Apply a film of grease (Fiske Lubriplate GR-132 or equivalent) to the surface of the ball detents (12 or 16 places depending on the model). Apply a *thin* film of grease to the inner diameter of the locking disc bore. Do not let the grease contact any friction surfaces. Excess grease can contaminate the friction surface and reduce SLM effectiveness.
3. With the motor shaft pointed up, place a steel ball into each of the drive collar detents. Install the locking disc and place a steel ball into each of the detents on the top of the locking disc.
4. Install the spring on top of the locking disc. Compress the spring by pushing down with the pinion. While holding the pinion in place, install the spacer, thrust bearing and stop collar. Note: The grooved washers on each end of the thrust bearing have differently sized holes; the end with the washer having the smallest hole should be installed next to the stop collar. Thread the stop collar onto the shaft to hold the spring in compression.

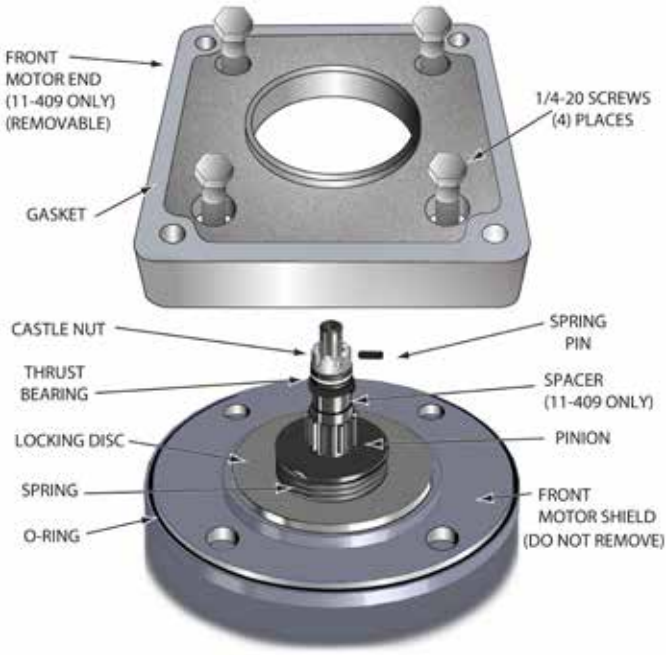

11-4_9 SLM COMPONENTS

5. Replace the front motor end (See figure at right) O-ring and install the front motor end with the (4) 1/4-20 screws in a crisscross pattern, torquing to 6 lb-ft (8 N•m). Place RTV around the wire entry into the motor.
6. Pushing down firmly on the pinion, measure the gap between the stop collar and the thrust bearing. This distance should measure 0.025 ± .005". This space is necessary to ensure proper operation. Tighten or loosen the stop collar as necessary to achieve the proper gap and simultaneously align one of the slots with the hole in the motor shaft. One complete slot rotation will change the gap by 0.009". Install the new 1/8" spring pin while supporting the shaft.
7. Recoat the gear teeth and components above the pinion liberally with a layer of Fiske Lubriplate GR-132 or equivalent.

OVER-TRAVEL LIMIT AND AUXILIARY SWITCHES

Complete switch assemblies may be replaced. It is not possible to replace individual switches. To replace switch assemblies, follow the instructions below.

WARNING

Electrical shock hazard. Disconnect power before proceeding.

Remove the control end cover by loosening the four captive, socket head cap screws (1/2" wrench). Remove the screws holding the switch assembly to the switch plate and slide it out to the side.

Transfer the wires to the terminals of the replacement assembly, ensuring the correct wire is transferred to the correct replacement assembly terminal (wires have push-on lugs). Install the replacement assembly and note that it rotates around one screw to permit an adjustment of the cam-to-switch lever spacing and switch operating point. To set the switch, place a .030" (.75 mm) shim between the cam and switch lever (see photo to right). The switch lever should be on the low or minimum radius portion of the cam when setting the switches. Position the switch assembly so that the switch is just actuated. DO NOT overstress the switch lever. Tighten both screws to 10 lb-ft (14 N•m) torque and remove the shim. When properly adjusted, the switch's cam actuated lever will remain in contact with the cam throughout the actuator travel.

ADDING AUXILIARY SWITCHES

It is sometimes possible to add auxiliary switches in the field. If the actuator was built with two or less auxiliary switches, they may be added in multiples of two, for a total of up to four auxiliary switches. See the table at right for part numbers.

Install wiring onto the switch push-on lugs and route the wires into the actuator terminal area. Remove the terminal compartment cover and solder wires to the underside of the terminal board according to the wiring diagram included with the new switch assembly. Install the new switch assembly and adjust according to the preceding instructions.

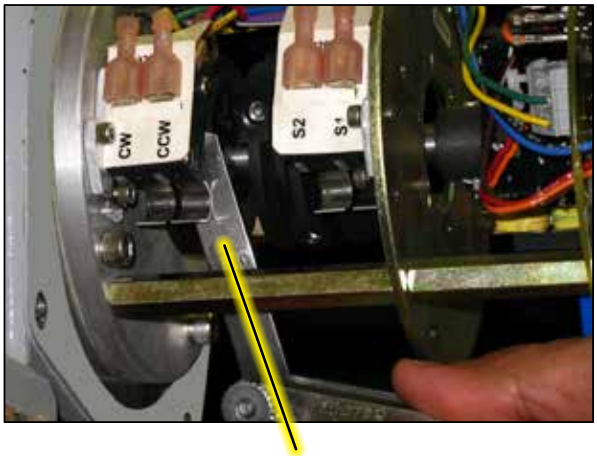

.030" (.75 MM) SHIM SHOULD BE INSERTED BETWEEN ALL LEVERS AND CAMS WHEN SETTING SWITCHES.

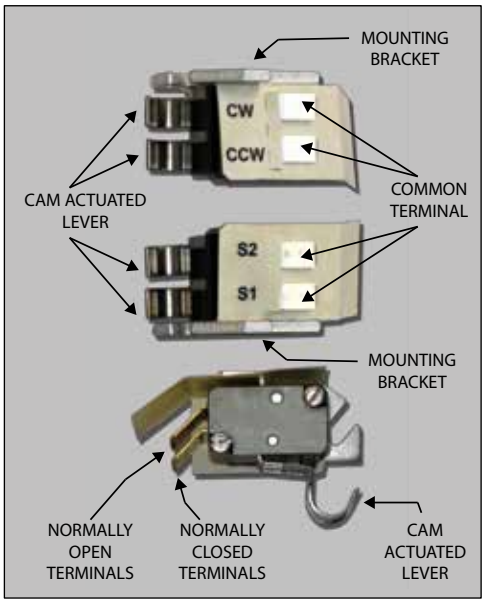

SWITCH PARTS

Description	*Part Number*
Over-travel limit switch assembly (CW/CCW)	20-3202-10
Auxiliary limit switch assembly, (2) switches (S1/S2)	20-3202-11
Auxiliary limit switch assembly, (4) switches (S1/S2/S3/S4)	20-3202-12
Limit switch cam assembly	11-0931-02

DCM-3 BOARD

Field repair of the DCM-3 board is not recommended.

WARNING

Electrical shock hazard. Disconnect power before proceeding.

To replace the DCM-3 board, remove the Digital Control Module / Terminal Block compartment cover (four captive, socket head cap screws (3/16" hex wrench)). Loosen the four captive screws holding the board to its mounting pads. Note the “L” shaped mounting bracket on the end of the board. To remove the board, pull the mounting bracket away from its mating surface and connector receptacle.

To install a DCM-3 board, lightly press the board connector into its receptacle until the mounting bracket is flush with its mating surface. Tighten the four captive screws to 8 lb-in (0.9 N•m). Replace the DCM-3 compartment cover and tighten the cover screws to 6 lb-ft (8 N•m) of torque.

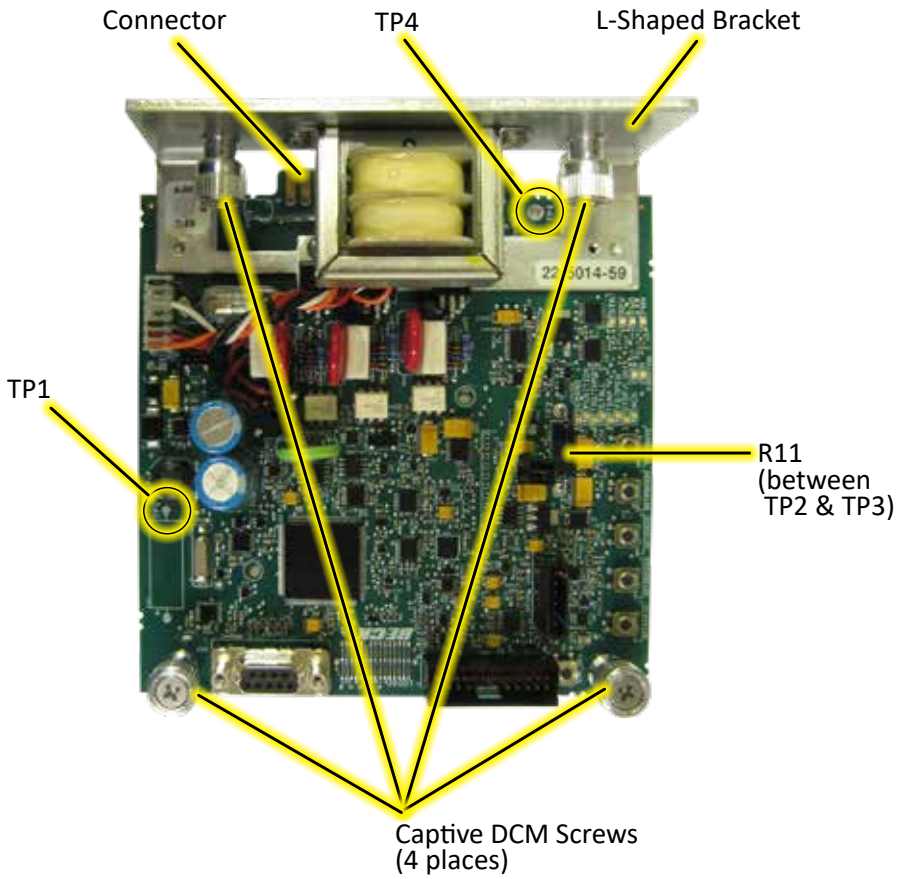

DCM-3

CPS-5

Field repair of the CPS-5 is not recommended.

WARNING

Electrical shock hazard. Disconnect power before replacing the CPS-5.

To replace the CPS-5, both the rotor and stator/circuit board assembly should be replaced. When returning the CPS-5 to the factory for service, do not separate the rotor and stator/circuit board assemblies from their mounting plates. The rotor should be held inside the stator with rubber bands when shipping.

The CPS-5 is configured to produce a position signal voltage between 1 and 5 volts over 100 degrees of travel; units configured for 90 degrees of travel will produce a position voltage between 1.2 and 4.8 volts. Configured properly, the CPS-5 raw position signal (measured at TP1 & TP4) increases as the output shaft rotates clockwise.

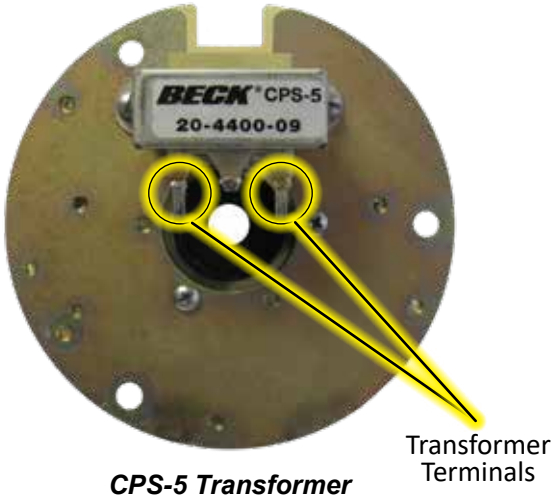

CPS-5 Transformer

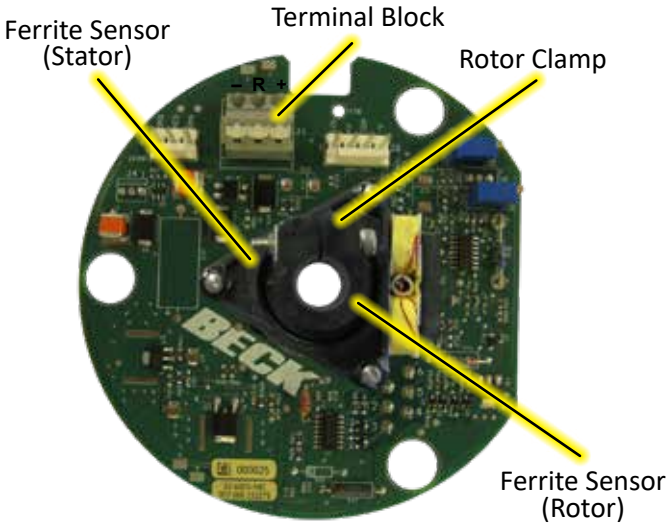

CPS-5 Transducer Board

REMOVE THE EXISTING CPS-5 ASSEMBLY:

1. Run the actuator to its midpoint of travel with the local Handswitch.
2. Disconnect 120 V ac power to the drive. Remove the terminal, DCM-3 compartment and control end covers (1/2" wrench).
3. Record the wire colors on the terminal block of the CPS-5 (see photo at left), then disconnect the wires. The terminals are spring-loaded. To remove a wire, press the tip of a small screwdriver into the slot at the top of the small lever. Push down to open the spring-loaded contact and release the wire.
4. Pull the wires from the transformer (see photo at left) back through the wire hole in the CPS-5.
5. Loosen and remove the 3 hex studs that clamp the CPS-5 in place. Ensure that the inboard hex stud is not loosened as the outboard stud is loosened.
6. Slide the CPS-5 stator assembly off the three mounting bolts.
7. Note the position of the rotor clamp, then loosen the rotor clamp screw and remove the rotor from the shaft.

INSTALL THE NEW CPS-5 ASSEMBLY:

8. Remove the rotor from the replacement CPS-5 assembly. Slide the rotor, clamp end first, onto the control shaft as close to the mounting plate as possible. Leave the clamp loose. Position the clamp in the same general location as the one removed previously.
9. Slide the new CPS-5 assembly over the studs and rotor. Replace the hex nuts but do not tighten. Carefully slide the rotor back into the CPS-5 assembly. Twist the rotor while sliding to prevent damage to the assembly. Tighten hex nuts to 5 lb-ft (7 N•m).
10. Thread the wires through the wire holes in the CPS-5 and reconnect them to the transformer and terminal block.
11. Restore 120 V ac power to the actuator and connect a meter to the output.
12. Insert a 0.031" (.80 mm) feeler gauge between the rotor clamp and stator. Position the clamp 0.031" (.80 mm) from the stator.
13. Rotate the rotor (only a minor adjustment should be necessary) on the control shaft until the output voltage measured across TP4 and TP1 (see illustration at right) reads 50% (approx. 3 volts) of the signal span. Tighten clamp to 5 lb-in (.6 N•m) torque.
14. Perform a position calibration procedure (p. 29).

MAINTENANCE

HANDSWITCH

WARNING

Electrical shock hazard. Disconnect power before proceeding.

REMOVE THE EXISTING HANDSWITCH:

1. Remove power from the actuator.
2. Remove the terminal cover (1/2” wrench).
3. To access the Handswitch, first remove the terminal barrier plate.
4. Clip the five wires from the old Handswitch (removing any tie wraps or sleeving that may interfere).
5. Remove the Handswitch knob by loosening the two inset screws (5/64" hex wrench).
6. Remove the threaded bushing behind the Handswitch knob. The remaining Handswitch assembly components may now be removed from the terminal compartment.

INSTALL THE NEW HANDSWITCH:

7. Insert the new threaded bushing through the actuator onto the shaft, then attach the components leading to the switch as shown in the illustration below.
8. Place the seal in the bushing, then insert the knob over the bushing. Tighten the two inset screws to 3 lb-ft (4 N•m).
9. Splice the wires from the new Handswitch assembly to the wires from the actuator, color to color. Ensure wiring is not exposed after splicing.
10. Replace the terminal cover, tightening the captive screws to 10 lb-ft (14 N•m).

NOTE: When the Handswitch is turned fully clockwise, “AUTO” should be indicated. Be sure to place the tab on the tabbed washer into the slot in the actuator body to secure the Handswitch in place.

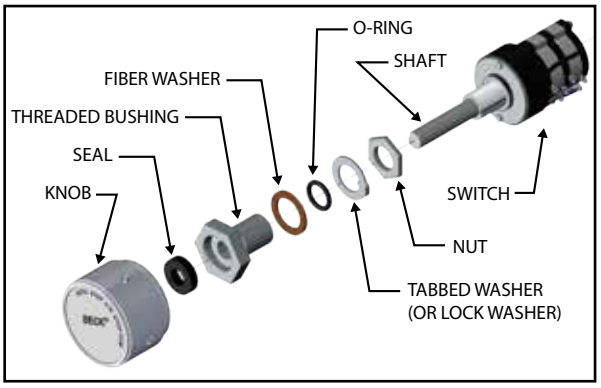

HANDSWITCH COMPONENTS

GASKETS

During routine service, inspect removed cover gaskets for wear or damage. In order to protect internal components, worn or damaged gaskets and O-rings should be replaced.

To remove, scrape all of the old adhesive and gasket material from the body housing and cover, if necessary. Replacement gaskets are self-adhering, silicone rubber. Peel the backing off the replacement gasket and carefully apply to the actuator body.

FUSE (F1) REPLACEMENT (FOR ACTUATORS EQUIPPED WITH OPTIONAL 208V OR HIGHER POWER SUPPLY)

If it is necessary to replace the power fuse (F1), use the following procedure:

WARNING

Electrical shock hazard. Disconnect power before proceeding.

Remove the terminal block cover. Locate the fuse holder (similar to the illustration below).

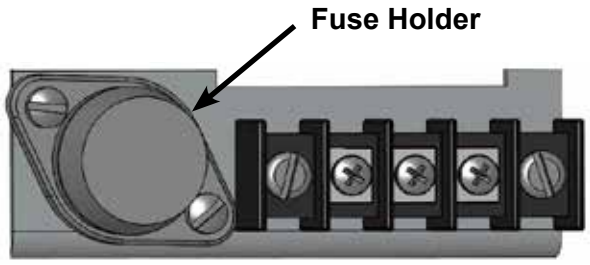

Turn the fuse holder CCW while pressing down. The fuse holder should spring loose when free. Remove the fuse holder from the actuator. Pull the fuse free from the holder. Replace the fuse with the same type (see table below) by pushing it into place.

Reinsert the fuse holder into the actuator. Turn the fuse holder CW while pressing down to tighten. Replace the terminal block cover. Tighten the cover screws to 6 lb-ft (8 N•m) torque.

REPLACEMENT FUSES (F1)

Input Voltage	Amps	Volts	Type	Part No.
208	3.2	250	Time Delay	11-1370-25
240	3.2	250	Time Delay	11-1370-25
380	1.8	600	Time Delay	11-1372-32
415	1.6	600	Time Delay	11-1372-31
480	1.4	600	Time Delay	11-1372-30
575	1.25	600	Time Delay	11-1372-29

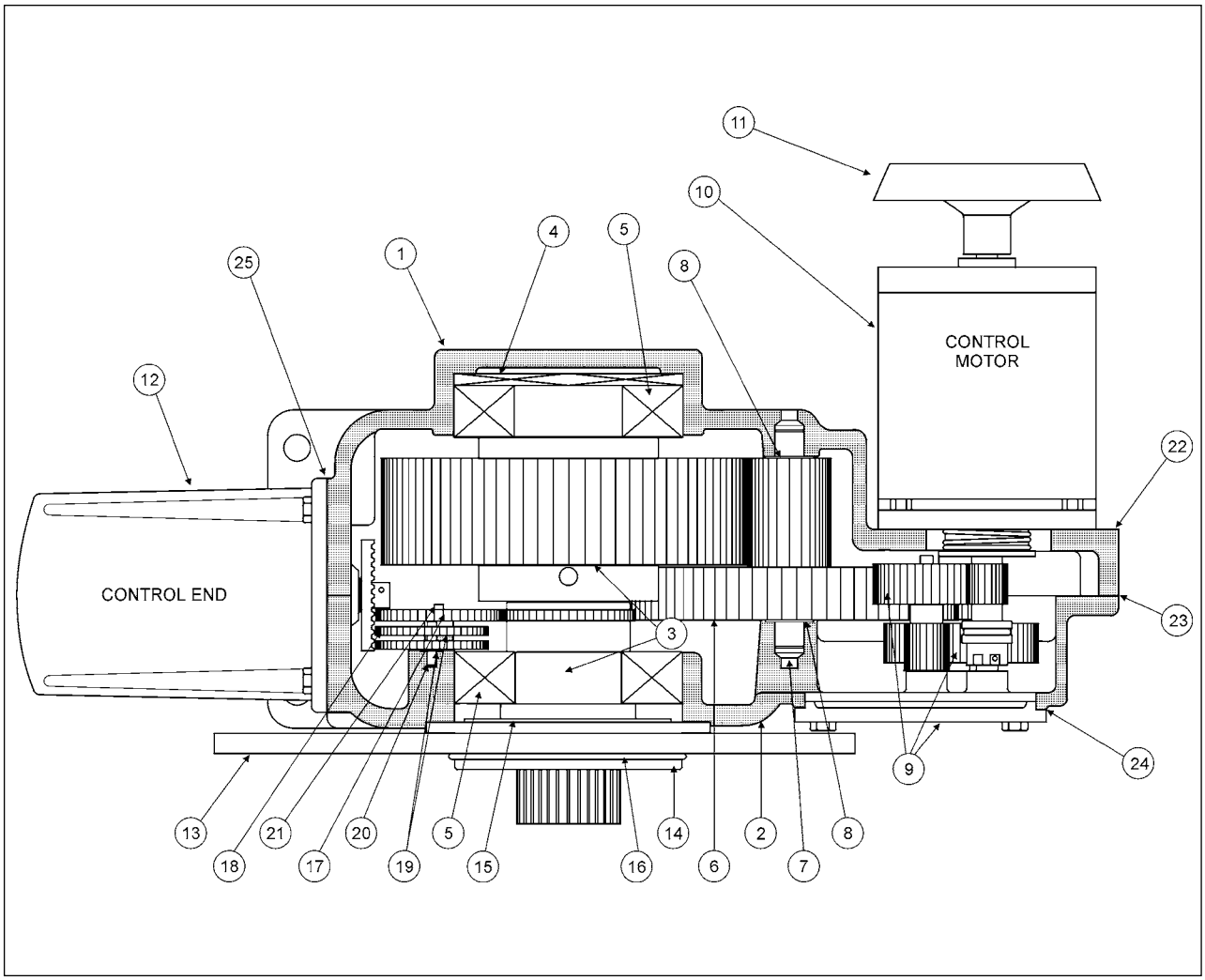

TYPICAL ACTUATOR COMPONENTS*

ITEM NO.	DESCRIPTION
1	Body, rear
2	Body, front
3	Output shaft assembly & main gear
4	Spring washer
5	Ball bearings, output shaft
6	Gear, 3rd combination
7	Pin, 3rd combination gear
8	Thrust washers
9	Gear module assembly, see Table on page 45 for part numbers
10	Control motor, see Table on page 45 for part numbers
11	Handwheel, 6 1/2" O.D.
12	Control end cover

ITEM NO.	DESCRIPTION
13	Adaptor plate
14	Sleeve, pilot tube
15	Gasket, sleeve, pilot tube
16	O-ring
17	Spur gear, 1st combination
18	Spur gear, 2nd combination
19	Washers, flat fiber
20	Pin, 2nd combination spur gear
21	Pin, 1st combination spur gear
22	Gasket, control motor
23	Gasket, body
24	Gasket, change gear plate
25	Gasket, control end cover

*To ensure exact replacement parts, include all nameplate data of the Beck actuator with the order.

MAINTENANCE

RECOMMENDED SPARE PARTS

It is recommended that certain replacement parts be stocked for quick availability in the event that service of your Beck actuator is required. The types of parts are listed below.

HOW TO ORDER SPARE PARTS

Select the needed parts from the spare parts list given below. Specify the drive's model / serial number (e.g., 11-439-031891-01-02) given on the nameplate to allow the factory to verify the part selection. Parts may be ordered by mail, telephone or fax, with the confirming order sent to the factory (see back cover).

RECOMMENDED SPARE PARTS

DESCRIPTION	PART NUMBER
DCM-3 board	22-5014-59
Fuse, 7A, 125V (For use on DCM-3)	11-1373-01
CPS-5 assy.	20-4400-09
Fuse (F1) w/ operating voltage >120 V	See p. 42

DESCRIPTION	PART NUMBER
Overtravel limit switch assy. (CW / CCW)	20-3202-10
Auxiliary switch assy.	
2 switches (S1–S2)	20-3202-11
4 switches (S1–S4)	20-3202-12
Gasket kit, Motor assy., Capacitor, Resistor	See Below

MOTORS[1], CAPACITORS, RESISTORS AND GASKETS

MOTOR					CAPACITOR		RESISTOR		GASKET KIT PART NO.
PART NO.	CURRENT (AMPS AT 60 HZ[2])	TORQUE (N•M)	RPM	FREQ. (HZ)	PART NO.	VAL. (µf)	PART NO.	VAL.(Ω)	
20-2201-32	2.3	14.0	72	60	14-2840-15	25	20-1971-04	37.5[3]	20-3110-03
				50	14-2840-05	8	20-1971-04	37.5[3]	
					14-2840-15	25			
20-2201-33	3.0	14.0	120	60	14-2840-15	25	20-1971-06	18[3]	
					14-2840-09	6			
				50	14-2840-15	25	20-1971-10	24[3]	
					14-2840-05	8			
					14-2840-09	6			

[1] All motors are rated 120 Vac.
[2] 50 Hz currents do not exceed 120% of 60 Hz levels.
[3] Resistor assembly.

MODEL 11-439 GEARS

SPUR GEARING RATIO / 1	STROKING SPEED sec./100 MOTOR			GEAR PART NUMBER		
	20-2201-33	20-2201-32				
	60 Hz 120 RPM	60 Hz 72 RPM	50 Hz 60 RPM	GEAR MODULE GEAR SET	OUTPUT SHAFT ASSEMBLY	THIRD. COMB. GEAR
756	108	180	216	14-9732-02	14-9872-10	14-9692-03
525	72	120	144	14-9732-07	14-9872-10	14-9692-03

TROUBLESHOOTING

The DCM-3 features diagnostics to help troubleshoot problems.

The following list provides a systematic method for isolating any actuator problems.

1. Operating Voltage
2. Handswitch Operation
3. DCM-3 Status Indication LEDs
4. DCM-3 Testpoints
5. DCM-3 Configuration
6. Shaft Position
7. Inhibitors / Statistics

VERIFY OPERATING VOLTAGE

To check the input power supply, view the Overview LEDs on the DCM-3 board (see illustration on page 18). This requires removing the DCM compartment cover (see page 9 for location).

The PWR LED should pulse from dim to bright, which indicates that power is applied to the actuator and the DCM-3 is successfully completing (continuous) self-tests. If the PWR LED is not lit or pulsing, there may be a problem with the AC power supply to the actuator.

Ensure the actuator is receiving the proper operating voltage (listed on the actuator nameplate). To check the voltage, locate the power terminals on the terminal block (see wiring diagram on the underside of the terminal compartment cover). Using a voltmeter, measure the voltage applied to those terminals. If the voltage is correct, continue troubleshooting; if the voltage is not correct, apply the proper power.

CHECK HANDSWITCH OPERATION

Verify proper operation of the Handswitch, which bypasses the actuator control electronics and switches power directly to the motor windings. Operate the actuator in both directions of travel using the Handswitch. If the actuator responds as expected, electro-mechanical problems with the motor and gearing may be eliminated. The trouble may lie with the electronics.

CHECK DCM-3 STATUS INDICATION LEDS

The DCM-3 has seven Status Indication LEDs that provide specific information about the actuator's state (see page 19). A lit LED indicates that a condition exists.

CHECK DCM-3 TESTPOINTS

The DCM-3 controls actuator output position by comparing the actuator's Demand input signal with the internal Position feedback signal generated by the actuator's position sensor (CPS-5). The integrity of these signals is critical to actuator performance. The signals should be verified whenever there are actuator problems. There are four test points provided on the DCM-3 board (see page 18 for locations) that are used to measure the Demand input and internal Position signals directly at the DCM-3.

Measure the Demand signal voltage across TP2(+) and TP3(–) (see page 18). A typical 4–20 mA input signal will measure a proportional 1–5 V dc across the test points. It is important to verify that the measured voltage corresponds correctly to the signal that is being applied. If there is a mismatch, further troubleshooting is required.

The Position signal to the DCM-3 is generated by the actuator's CPS-5. The CPS-5 is designed to provide a 1–5 V dc signal to the DCM-3 corresponding to 100 degrees of actuator output shaft rotation. The Position signal can be determined at the DCM-3 by measuring the voltage across TP4(+) and TP1(–) (see page 18). Verify that this signal matches Demand and the position of the output shaft (see chart below).

Both the Demand and Position signals can also be checked at the appropriate terminals in the terminal block, via HART communications or through the Serial port. All values should agree with test point values. Any differences will require further troubleshooting.

CPS-5 POSITION SIGNAL VOLTAGES

Shaft Position	100° Rotation		90° Rotation	
	CW	CCW	CW	CCW
0%	1.0	5.0	1.2	4.8
25%	2.0	4.0	2.1	3.9
50%	3.0	3.0	3.0	3.0
75%	4.0	2.0	3.9	2.1
100%	5.0	1.0	4.8	1.2

TROUBLESHOOTING

CHECK DCM-3 OPERATION MODE SETTING

The DCM-3 can be configured for several operational modes as shown in HART menu 3E (page 54) or Serial command "opmode" (page 61).

The factory configuration is the "Follow" mode. In this mode, the actuator is positioned by the 4–20 mA Demand signal when the Handswitch is set to AUTO.

The “Hold” mode causes positioning according to the HART Interface Demand Value (HART menu 3E).

The “Stay" mode causes the output shaft to remain stationary and maintain its present position. In "Stay" mode, the Handwheel cannot be freely turned as it will move back to the position where the "Stay" mode was activated.

The "Stop" mode removes power from the motor. In "Stop" mode the Handwheel can be freely turned. All operating modes can be overridden by the actuator Handswitch. If the operation mode is (inadvertently) switched to a mode other than "Follow" there will not be an outward indicator. ***Note that resetting the DCM-3 to factory settings does <u>not</u> change the operational mode back to "Follow" for safety purposes.***

CHECK SHAFT POSITION

The output shaft position (%) can be viewed in HART (menu 1) or by running the Serial command "stat".

If the Position value (%) does not appear to match the physical output shaft position, a CPS-5 rotor adjustment may be required. Follow these directions to correct positioning (see page 41 for component identification):

1. Rotate the rotor on the control end shaft until the dc voltage measured across terminals + and R reads 50% of the signal span (approx. 3 volts). Tighten clamp to 5 lb-in (0.6 N•m) torque.
2. Using the Handswitch, rotate the output shaft of the actuator in the clockwise direction. The dc voltage measurement across the + and R (–) terminals should increase, in which case the rotor adjustment is complete. If the voltage decreases, however, the rotor is out of phase with the actuator travel and will require adjustment, continue to step 3.
3. Position the actuator with the Handswitch until the voltage reading across terminals + and R (–) is approximately 3 volts.
4. Loosen the rotor clamp screw and rotate the rotor 180 degrees. Verify the voltage is 3.0 volts and tighten the rotor clamp screw. Repeat step 2.

Note: The position signal can also be measured across DCM-3 test points TP4 (+) and TP1 (–) rather than CPS-5 terminals (+) and R (–).

CHECK DCM-3 INHIBITORS / STATISTICS

Conditions that prevent the DCM-3 from positioning the actuator are called inhibitors. HART MENUS 5F and 5G list the CW and CCW inhibitors respectively. Inhibitors may also be reviewed by running the Serial command "stat" (see page 63). The following list indicates why the inhibitor would be in the “ON” state.

<u>Balance</u>
Demand and position are balanced.

<u>Supervisory</u>
DCM-3 is initializing.

<u>Stall</u>
A stall condition has been detected.

<u>OverTrq/Thr</u>
Excessive torque load on output shaft.

<u>Switch Block</u>
Not applicable for Model Group 11 actuators.

<u>Bad Pos Sig</u>
The position signal is out of range.

<u>Bad Dem Sig</u>
The Demand signal is out of range.

<u>Local Cal</u>
The calibrate button is being pressed on the pushbutton panel.

The factory can assist with troubleshooting—please provide the results of the above review to expedite assistance.

CONDITIONS	POSSIBLE CAUSES	CORRECTIONS
1. No DCM-3 LEDs are illuminated.	a. No power is applied to the actuator. b. Incorrect power is applied to the actuator. c. Main power fuse/breaker is blown. d. DCM-3 malfunction.	a. Apply operating voltage to the appropriate terminals. b. Verify correct voltage on actuator nameplate and ensure that it is applied at the operating voltage terminals. c. Verify fuse/breaker integrity. Replace/reset if blown. Find cause of short circuit. d. Replace DCM-3.
2. STAT LED is illuminated.	a. A status alarm is active.	a. Check the status indication LEDs on the pushbutton interface of the DCM-3. Continue troubleshooting based on the LEDs that are illuminated.
3. Demand LED is illuminated.	a. No Demand signal. b. Applied Demand signal is outside of configured range. c. Polarity of applied signal wires is reversed.	a. Apply a Demand signal to terminals AA (+) & BB (–). b. Confirm Demand signal value via HART or by measuring DC voltage across DCM-3 test points TP3(+) & TP2(–). Should be 1–5 volts for 4–20 mA applied signal. c. Correct the polarity of the applied control signal wires on terminals AA (+) & BB (–).
4. POSITION LED is illuminated.	a. Position signal voltage generated by CPS-5 read by the DCM-3 is outside of the configured range. b. CPS-5 malfunction. c. DCM-3 malfunction.	a. Using the HART communicator check the Position Sensor Setup menu to verify the Present CPS voltage falls within the configured CPS Zero% and Span (typical range 1–5 volts); OR measure DC voltage between DCM-3 test points TP4 (+) and TP1 (–) to verify Present CPS voltage. If the voltage is outside of 1–5 volts, recalibrate or replace the CPS-5. b. Replace CPS-5. c. Replace DCM-3.
5. TORQUE LED is illuminated (applicable only to actuators equipped with optional torque sensing).	a. Torque exceeding configured limit (typically over 150% of rated torque) is being applied to the output shaft. b. Torque Null and Torque Constant values are not set correctly. c. Torque cable is not connected to DCM-3.	a. Eliminate cause of excessive torque (i.e., binding damper, improper linkage, etc.). b. Locate Torque Null and Constant values inside DCM compartment and set via HART or Serial port. c. Reconnect torque cable to DCM-3.
6. STALL LED is illuminated.	a. Actuator has stalled—unable to achieve desired position within the configured “STALL TIME”. b. The configured stall time is less than the configured Max Travel Time.	a. Eliminate the obstruction and reset the stall by reversing direction on your Demand signal, cycling the power, or issuing the stall reset from HART or Serial command. b. Configure the stall time to exceed the Max Travel Time via HART or Serial command.
7. TEMP F LED is illuminated.	a. The measured temperature at the DCM-3 is outside of the normal operating range of -40° to 185° F.	a. Protect the actuator from the extreme temperatures below or above the operating range to eliminate the alarm.
8. FB OPEN LED is illuminated.	a. The position Feedback circuit current loop is not complete. b. The position Feedback is enabled, but not in use.	a. Ensure the device measuring the 4–20 mA Feedback is properly terminated on terminals DD (–) and EE (+) and is applying a 0–800 ohm load resistance. b. Disable Feedback via HART or Serial command; OR terminate the Feedback loop by applying a 0–800 ohm load resistance across terminals DD and EE.

TROUBLESHOOTING

CONDITIONS	POSSIBLE CAUSES	CORRECTIONS
9. STOP/LIMIT LED is illuminated.	a. The applied power is below the tolerance (-15%) of the nameplate operating voltage. b. A DCM-3 fuse is open. c. A component failure has occurred on the DCM-3. d. The Handswitch is in STOP. e. The actuator has traveled to an over-travel limit switch. f. The actuator is not at an over-travel limit switch, but the limit switch is open.	a. Apply the correct operating voltage to the actuator per the voltage stamped on the nameplate. b. Replace the open fuse. c. Replace the DCM-3. d. Place the Handswitch in AUTO. e. Verify if the limit switch is set outside of the electrically calibrated limits. Readjust, if necessary, or replace. f. Replace the over-travel limit switch (CW/CCW) assembly.
10. Power LED is pulsing bright to dim.	a. This indicates normal function.	a. No action required.
11. All LEDs are illuminated or flashing.	a. A component failure has occurred on the DCM-3.	a. Replace the DCM-3.
12. REV LED is illuminated, actuator is not moving, and there are no other status alarms.	a. Operation mode is set to “STOP”.	a. Using HART (operation mode menu) OR using Serial command “opmode”, change operation mode to “Follow”.
13. Actuator will not hold position with Handswitch in STOP.	a. Self Locking Mechanism (SLM) is worn or damaged.	a. Rebuild the SLM assembly.
14. Motor runs, but the output shaft does not move in one or both directions.	a. Self Locking Mechanism (SLM) has failed.	a. Rebuild the SLM assembly.
15. PWR LED is flashing, no status LED’s are lit and does not respond to Demand signal or Handswitch.	a. The Handswitch is damaged. b. The Handswitch jumper between terminal A and C is missing or faulty.	a. Check continuity from terminals N to V and M to U with Handswitch in AUTO position. If either does not show continuity, replace Handswitch. b. Install a wire jumper between terminals A and C.
16. PWR LED is flashing, no status LED’s are lit, actuator functions with the Handswitch, but does not respond to Demand signal.	a. A plug-in jumper has been installed in the 24-pin connector (J2) of the DCM-3 board.	a. Remove any jumpers from the J2 connector on the DCM-3.
17. HART communications cannot be established with the DCM-3.	a. The device description (DD) file is not installed. b. The HART communicator is not compatible with Beck equipment. c. The HART communications circuit on the DCM-3 is damaged.	a. Install the Beck MK-2 DD on your HART device. b. Utilize a compatible HART communicator or configure the actuator through the Serial port. c. Replace the DCM-3.
18. Position voltage on DCM-3 testpoints TP4 and TP1 is within 1–5 volts DC following the actuator position, but the position Feedback signal at terminals DD and EE remains constant or is erratic.	a. The position Feedback circuit on the DCM-3 is damaged.	a. Replace the DCM-3.

CONDITIONS	POSSIBLE CAUSES	CORRECTIONS
19. Output shaft rotates opposite of desired direction when applying a 4–20 mA Demand signal.	a. The rotation direction is incorrectly configured.	a. Configure the rotation direction using pushbutton, HART, or Serial method.
20. Motor erratic or runs in wrong direction in AUTO or using Handswitch.	a. Motor winding is open. b. Motor capacitor is shorted or open. c. Motor resistor is open.	a. Replace motor assembly. b. Replace capacitor. c. Replace resistor assembly.
21. Actuator does not follow input signal until maximum or minimum is reached, then drives uncontrollably to limit.	a. Wire jumpers on terminals M and N are reversed. b. CPS-5 is not calibrated.	a. Connect terminal jumpers from M to D and from N to F. b. Recalibrate the CPS-5.
22. Actuator oscillates in AUTO mode.	a. Excessive noise on the input signal. b. Physical obstruction causing a stall condition (e.g., valve jammed or load greatly exceeds actuator rating.) c. The DCM-3 is malfunctioning. d. Excessive wear in the gear train or bearings. e. CPS-5 Failure. f. Self Locking Mechanism (SLM) is worn or damaged.	a. Eliminate noise or increase actuator step size. b. Check operation with Handswitch and remove obstruction if present. Handswitch bypasses the DCM-3 board. c. Replace the DCM-3 board. d. Replace worn actuator parts. e. Replace the CPS-5 board. f. Rebuild the SLM.
23. Actuator will not run in either direction or one direction in AUTO or using Handswitch.	a. Over-travel limit switch failure. b. Handswitch failure.	a. Replace over-travel limit switch assembly (CW/CCW). b. Replace Handswitch assembly.
24. Actuator does not stop at normal or desired limit of shaft travel.	a. DCM-3 position calibrated incorrectly. b. Limit switches set incorrectly. c. Over-travel limit switch failure.	a. Calibrate DCM-3 0% and 100% positions. b. Readjust the limit switches. c. Replace the over-travel limit switch assembly (CW/CCW).
25. Position Feedback signal does not reach maximum signal, but low end calibration is correct.	a. Feedback loop is overloaded.	a. Make sure that the load resistance is between 0 and 800 ohms total across terminals DD and EE.
26. Actuator runs uncontrolled to one end of travel.	a. Handswitch Failure. b. The DCM-3 is malfunctioning. c. The CPS-5 is malfunctioning. d. Terminal block jumpers F to N and D to M not connected. e. The actuator has detected a loss of Demand signal (LOS) and is configured for GTP 0% or 100%. f. Handswitch in CW or CCW position.	a. Check continuity from terminals A–V and A–U with Handswitch in AUTO and actuator power disconnected. If either shows continuity, replace Handswitch. b. Verify CPS-5 voltage signal at DCM-3 test points TP4 and TP1 for 1–5 volts DC corresponding with output shaft position. If signal is valid, replace DCM-3. c. Verify CPS-5 wire connections, check voltage at DCM-3 test points TP4 and TP1 for 1–5 volts DC corresponding with output shaft position. Replace CPS-5 if voltage does not change with position. d. Install jumpers. e. See troubleshooting condition no. 3 (Demand LED is illuminated). f. Return Handswitch to AUTO position.

APPENDIX HART® Communication

BECK-MK2 HART DEVICE DESCRIPTION (DD) COMMUNICATOR MENUS FOR THE DCM-3 (SHOWN WITH SAMPLE VALUES)

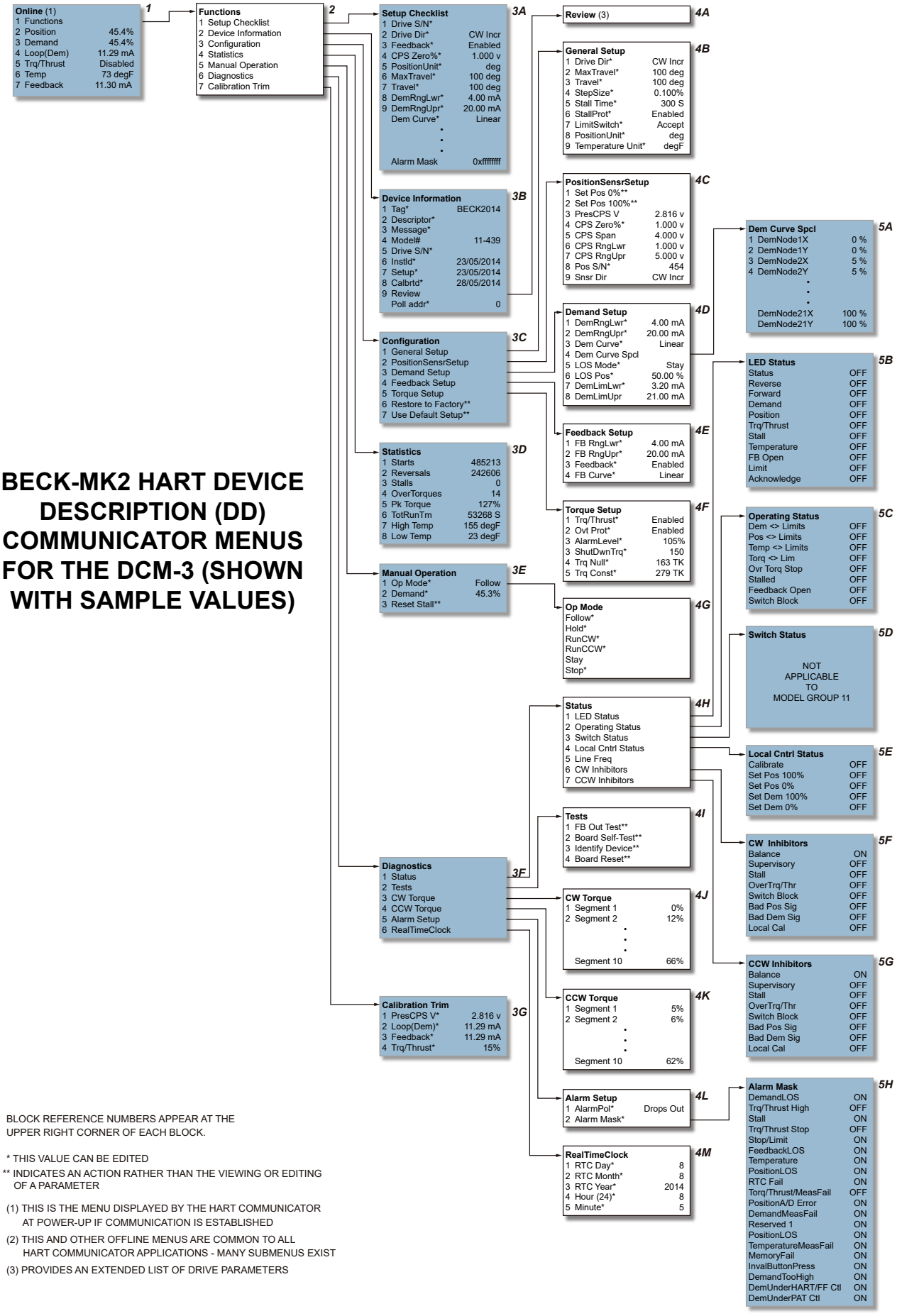

BLOCK REFERENCE NUMBERS APPEAR AT THE UPPER RIGHT CORNER OF EACH BLOCK.

* THIS VALUE CAN BE EDITED

** INDICATES AN ACTION RATHER THAN THE VIEWING OR EDITING OF A PARAMETER

(1) THIS IS THE MENU DISPLAYED BY THE HART COMMUNICATOR AT POWER-UP IF COMMUNICATION IS ESTABLISHED

(2) THIS AND OTHER OFFLINE MENUS ARE COMMON TO ALL HART COMMUNICATOR APPLICATIONS - MANY SUBMENUS EXIST

(3) PROVIDES AN EXTENDED LIST OF DRIVE PARAMETERS

The DCM-3 board is the control center of the actuator—configuration and calibration are accessed and set through the DCM-3 board. Using the HART interface requires a HART compatible communicator or any device, computer or controller capable of communicating with HART devices and supporting the Beck DCM-3 device description. This instruction supports actuators equipped with a DCM-3 (p/n 22-5014-59). This DCM-3 interfaces with the BECK-MK2 Device Description.

HART® INTERFACE

The interface menu tree for communicating with a DCM-3 using the BECK-MK2 Device Description is located on the previous page. This menu tree summarizes possible setup options, features and available information.

HART® COMMUNICATORS FOR BECK-MK2

The BECK-MK2 Device Description requires a HART Communicator that is HART 5 capable and has the ability to import Device Description Language Files (DDL) that are certified by the HART Communications Foundation.

USING THE 275, 375 OR 475 HART® COMMUNICATOR

The HART Communicator leads should be connected in parallel with the analog Demand signal wiring. This allows the communicator to simultaneously communicate over the analog input wires and does not disturb the analog Demand signal, or disrupt the DCM-3 functions. However, any program changes to the DCM-3 will momentarily suspend the operation of the board (maintains last state) while the change is implemented. Typically, this is only for a second or two.

When the communicator is connected in parallel across the analog Demand wires (see illustration below), turn on the communicator. Once communications are established, the "Online" display will appear. If the actuator is multidropped with other devices on a HART network, the first display screen will list all devices and require a selection before the "Online" display is shown. Follow the HART DD menu on the previous page to navigate.

NOTE: If the communicator is unable to communicate, it displays the message, "No Device Found". Check to make sure the leads are securely connected to the Demand wiring and retry. If communications still do not occur, the communicator polling setup may be improperly set. Check the "utility" menu and make sure communications polling is set to "always poll".

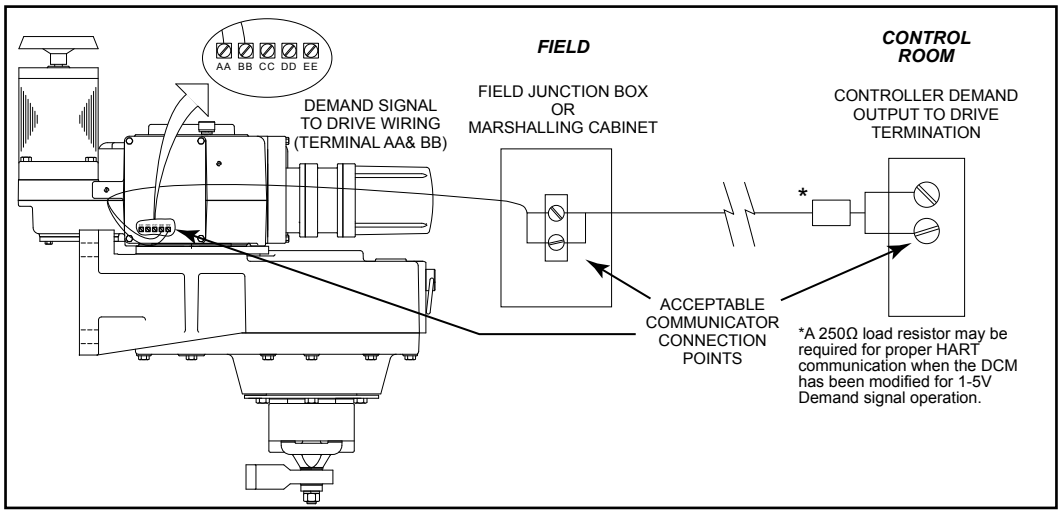

MENU DESCRIPTIONS

(See HART Communicator Menu on page 50)

MENU 1 -- Online

When communications are established with the communicator, the Online menu is displayed.

1 **Functions**: The link to the menu tree.

2 **Position**: The output shaft position displayed as a percent of range.

3 **Demand**: The Demand signal displayed as a percent of range.

4 **Loop (Dem)**: The Demand signal measured in mA.

5 **Trq/Thrust**: The present torque value as applied to the output shaft (optional).

6 **Temp**: The ambient temperature of the DCM-3.

7 **Feedback**: The milliamp output signal representing present position of the output shaft.

APPENDIX HART® Communication

MENU 2 -- Functions

From the Functions menu, any of the DCM-3 functional menus can be selected and accessed. There are seven functional areas: Setup Checklist, Device Information, Configuration, Statistics, Manual Operation, Diagnostics, and Calibration Trim.

MENU 3A -- Setup Checklist

The Setup Checklist provides a quick way for the user to setup the most important items necessary for basic actuator operation without having to move through multiple sub-menus. These items are defined on the following pages in their specific menu locations.

MENU 3B -- Device Information

The Device Information menu provides information about the actuator. There are ten useful information entries that may be viewed and/or edited.

1 **Tag**: An 8 character entry that can be used to identify a specific field device label.

2 **Descriptor**: A 16 character field that can be used to provide any description desired.

3 **Message**: A 32 character field that can be used to provide any message desired.

4 **Model#**: Displays the model number of the actuator in which the DCM-3 is installed. This field may be edited. Note that changing this field may cause the “Use Default Setup” command to not function.

5 **Drive S/N**: The Serial number as shown on the actuator nameplate.

6 **InstId**: Installation date of the actuator or DCM-3.

7 **Setup**: The setup date has no affect on actuator operation.

8 **Calbrtd**: The calibration date has no affect on actuator operation.

9 **Review**: Link to the Review menu.

10 **Poll addr**: Used to find the actuator. Most configurations should use "0".

MENU 3C -- Configuration

The Configuration menu serves as the gateway to all of the actuator operating parameters that can be used to configure the actuator based on the desired operation.

1 **General Setup:** Link to General Setup menu.

2 **PositionSensrSetup:** Link to PositionSensrSetup menu.

3 **Demand Setup**: Link to Demand Setup menu.

4 **Feedback Setup**: Link to Feedback Setup menu.

5 **Torque Setup**: Link to Torque Setup menu.

6 **Restore to Factory**: Restores field-configurable parameters back to the settings in effect when the DCM-3 was shipped from the factory.

7 **Use Default Setup**: Changes the DCM-3 position sensing voltage ranges to the proper ranges for the actuator model.

MENU 4B -- General Setup

This menu sets actuator operating parameters. The nine parameter entries are as follows:

1 **Drive Dir**: The direction the output shaft rotates (looking into the output shaft) in response to an increasing Demand signal.

2 **MaxTravel**: The maximum available travel distance of the output shaft in degrees. This number corresponds to the actuator design—if the correct Serial Number is entered, this parameter should not be changed.

3 **Travel**: The number of degrees of output shaft travel for 100% span.

4 **StepSize**: The smallest Demand change that will cause an output shaft movement.

5 **Stall Time**: The amount of time the motor will run before Stall Protection is initiated.

6 **StallProt**: This entry is set as either “Enabled” or “Disabled”.

7 **LimitSwitch**: This entry is set as either “Accept” or “Alert” and defines whether or not contacting an overtravel limit switch outside of the normal 0% to 100% travel range will cause an alarm condition.

8 **PositionUnit**: The numeric unit of measure for the output shaft position in angular degrees.

9 **Temperature Unit**: The unit of measure for temperature sensing. May be “degF” (fahrenheit) or “degC” (celsius).

MENU 4C -- PositionSensrSetup

This menu contains parameters that determine how the DCM-3 interprets the output shaft position signal from the CPS-5.

1 **Set Pos 0%**: Sets the 0% position to match the present output shaft position. This does not change the 100% position.

2 **Set Pos 100%**: Sets the 100% position to match the present output shaft position. Also instructs the DCM-3 to change "Travel" span based on the 0% position. This does not change the 0% position.

3 **PresCPS V**: Displays the CPS-5 signal voltage at the present output shaft position. Not editable.

4 **CPS Zero%**: Displays the CPS-5 voltage at the 0% output shaft position. May be edited to define the voltage at the lowest operating point of travel.

5 **CPS Span**: Displays the voltage signal span from the CPS-5 for maximum possible rotation of the output shaft. This is the upper range voltage minus the lower range voltage. Not editable.

6 **CPS RngLwr**: Displays the CPS-5 voltage signal at the lowest possible point of travel. Not editable.

7 **CPS RngUpr**: Displays the CPS-5 voltage signal at the highest possible point of travel. Not editable.

8 **Pos S/N**: Displays the Serial number of the CPS-5 and has no effect on actuator function.

9 **Snsr Dir**: The direction of output shaft rotation that causes the CPS-5 signal to increase. This direction is typically CW and is not editable.

MENU 4D -- Demand Setup

The parameters on this menu determine the range and characterization of the Demand signal. It also includes parameters that determine behavior when the Demand signal is absent.

1 **DemRngLwr**: Sets and displays the signal value in mA that represents 0% Demand (default is 4.00 mA, minimum is 0.5 mA). This value should be set above "DemLimLwr".

2 **DemRngUpr**: Sets and displays the signal value in mA that represents 100% Demand (default is 20.00 mA, maximum is 21.00 mA). This value should be set below "DemLimUpr".

3 **Dem Curve**: Determines the relationship between the Demand signal and the position of the output shaft. Typically set to Linear, but may also be set to Square, Square Root or customized Special Curve.

4 **Dem Curve Spcl**: Link to the "Dem Curve Spcl" menu.

5 **LOS Mode**: Action on loss of Demand signal.

6 **LOS Pos**: If the "LOS Mode" has been set to "Go-to-Pos", this defines where the output shaft will move (in percent of travel) during loss of Demand signal conditions.

7 **DemLimLwr**: Sets the threshold (in mA) below which the Demand signal is considered lost. This value should be set below "DemRngLwr".

8 **DemLimUpr**: Sets the threshold (in mA) above which the Demand signal is considered invalid. The Demand alarm will activate until the signal is brought below this level. This value should be set above "DemRngUpr".

MENU 5A -- Dem Curve Spcl

This menu allows setting the Demand signal characterization curve.

MENU 4E -- Feedback Setup

This menu is where all the Feedback signal related actuator parameters are set.

1 **FBRngLwr**: The value of the Feedback signal (in mA) that corresponds to a 0% output shaft position. This value can range between 3.00 mA and 16.00 mA (default = 4.00 mA).

2 **FBRngUpr**: The value of the Feedback signal (in mA) that corresponds to a 100% output shaft position. This value can range between 7.00 mA and 21.00 mA (default = 20.00 mA).

3 **Feedback**: Enables or Disables the Feedback signal.

4 **FB Curve**: Allows a choice between a Feedback signal that linearly represents true shaft position or a characterized Feedback signal that inverts the effect of a characterized Demand signal.

MENU 4F -- Torque Setup (optional)

This menu is where all the Torque related actuator parameters are set. NOTE: Torque features require torque sensing hardware. This is an extra-cost option that must be specified at the time the actuator is ordered.

1 **Trq/Thrust**: Enables or disables torque sensing.

2 **Ovt Prot**: Enables or disables overtorque protection which will remove power from the motor if excessive torque is detected.

3 **AlarmLevel**: Sets the value that, if exceeded, will cause the Torque Alarm to activate.

4 **ShutDwnTrq**: Sets the output shaft torque in percentage of actuator rating that, if exceeded, removes power from the motor.

5 **Trq Null**: The torque sensor value that represents 0% output shaft torque.

6 Trq Const: The internal DCM-3 signal span associated with the output shaft torque. This value is determined during manufacture and is noted on a label inside the DCM-3 cover.

MENU 3D -- Statistics

This menu is where all the actuator's stored operating statistics are available.

1 Starts: The total number of motor starts.

2 Reversals: The total number of times the motor has started in the direction opposite to the previous start.

3 Stalls: The total number of times the stall time has been exceeded.

4 OverTorques: The total number of times that excessive torque was detected at the output shaft.

5 Pk Torque: The highest recorded torque on the output shaft.

6 TotRunTm: Total amount of time the motor has been powered (in seconds).

7 High Temp: Highest temperature recorded in the DCM-3 compartment (in degrees fahrenheit).

8 Low Temp: Lowest temperature recorded in the DCM-3 compartment (in degrees fahrenheit).

MENU 3E -- Manual Operation

This menu is used to allow manual operation using HART® communications. There are three manual operation procedures available:

1 Op mode (Menu 4G): Selects the operating mode of the DCM-3. There are six possible choices: "Follow", "Hold", "RunCW", "RunCCW", "Stay" and "Stop". "Follow" mode is the normal state of operation and allows the DCM-3 control in response to the analog input Demand signal. "Hold" mode forces the DCM-3 to position according to the HART Demand value (see right). "RunCW" mode forces the actuator to move CW. "RunCCW" forces the actuator to move CCW. The "Stay" mode forces the actuator to maintain its present position. Note that in "Stay" mode, the Handwheel cannot be freely turned. The "Stop" mode removes power from the motor. Note that in "Stop" mode the Handwheel can be freely turned. Note that the Handswitch overrides all operating modes.

2 Demand: This procedure sets the effective Demand signal. If "Op mode" is set to "Hold", entering a valid value (-5% to 105%) will control the motor. If "Op mode" is set to "Follow", the analog Demand signal is displayed (unless an alarm condition exists).

3 Reset Stall: This procedure resets normal actuator operation after a stall condition has caused the motor to shut down. Note that stall conditions can also be reset by simply reversing the input Demand signal or cycling the actuator AC power.

MENU 3F -- Diagnostics

This menu provides access to all DCM-3 stored diagnostic information concerning actuator operation.

MENU 4H -- Status

This menu provides links to menus that monitor the operational status of the actuator. It also displays one parameter—line frequency.

5 Line Freq: The power line frequency as measured by the DCM-3.

MENU 5B -- LED Status

The LED Status parameter allows remote checking of which LED's on the DCM-3 are illuminated.

MENU 5C -- Operating Status

The Operating Status parameter is a summary of whether process-related conditions are inside or outside of anticipated limits. These conditions control the Status Indication LEDs.

1 Dem<>Limits: Caused by the Demand signal falling below or above acceptable levels.

2 Pos<>Limits: Caused by the CPS-5 signal being outside the range anticipated by the DCM-3.

3 Temp<>Limits: The ambient temperature of the DCM-3 is outside of the rating.

4 Torq<>Lim: Warns that torque is high.

5 Ovr Torq Stop: Overtorque protection is preventing the DCM-3 from running the motor.

6 Stalled: A Stall alarm is active.

7 Feedback Open: The Feedback signal is enabled, but cannot follow the proper current.

8 Switch Block: The DCM-3 cannot power the motor due to an electro-mechanical switch. Check the Handswitch and over-travel limit switches.

MENU 5D -- Switch Status

Not applicable to Group 11 actuators.

MENU 5E -- Local Cntrl Status

This parameter allows remote monitoring of which buttons on the local configuration interface are being pressed.

MENU 5F -- CW Inhibitors

Allows viewing of the DCM-3 condition that is preventing the actuator motor from running in the CW direction.

MENU 5G -- CCW Inhibitors

Allows viewing of the DCM-3 condition that is preventing the actuator motor from running in the CCW direction.

MENU 4I -- Tests

This menu provides access to some routines that help determine if the actuator is functioning properly.

1 FB Out Test: Allows manual verification of the Feedback output signal to check operation and accuracy.

2 Board Self-Test: Instructs the DCM-3 to check various power and sensing circuits. This test will cause the actuator to reposition, so it should be run offline and only when a DCM-3 problem is suspected.

3 Identify Device: Causes the ACKNOWLEDGE LED on the DCM-3 to flash for two seconds. Ensures the HART system is addressing the correct actuator.

4 Board Reset: Causes the DCM-3 to initiate a reset cycle similar to a power-up reset. This manual reset will cause the actuator to reposition. This procedure is not typically necessary.

MENU 4J -- CW Torque

This menu displays the peak output shaft torque measured for 10 segments. These torque values are measured with the motor running and moving the output shaft CW.

MENU 4K -- CCW Torque

This menu displays the peak output shaft torque measured for 10 segments. These torque values are measured with the motor running and moving the output shaft CCW.

MENU 4L -- Alarm Setup

The Alarm Setup menu parameters allow modification of the behavior of the alarm.

1 AlarmPol: Whether the solid state relay opens on alarm or closes on alarm.

2 Alarm Mask: Link to the Alarm Mask menu which allows specific alarm conditions to be ignored.

MENU 5H -- Alarm Mask

Allows selection of alarm conditions that will not cause an alarm at terminal E.

MENU 4M -- RealTimeClock

This menu allows the date and time to be set.

1 RTC Day: Day of the month (numeric value).

2 RTC Month: Month (numeric value).

3 RTC Year: Year (4 digits).

4 Hour (24): Hour of the day (24 hour format).

5 Minute: Minute of the hour (0 through 59).

MENU 3G -- Calibration Trim

The Calibration Trim menu sets and displays actuator calibration values. **Note that changing the calibration trim can cause signal measurement difficulties if performed improperly.**

1 PresCPS V: Displays and/or trims the present voltage of the position signal. This value may also be measured at DCM-3 test points TP1(–) and TP4(+). This trim is set and tested at the factory. Changing this value can cause voltage measurement errors.

2 Loop(Dem): Displays the Demand signal as measured at the field wiring terminals. When the Demand control loop signal is being overridden by a special mode of operation, the effective Demand will not correspond to the mA value. This value can be edited to trim the Demand to ensure accurate measurement of the analog signal. Demand can only be trimmed at 4.0 mA and 20.0 mA.

3 Feedback: Displays the mA signal representing the output shaft position as measured at the field wiring terminals. This value can be edited.

4 Trq/Thrust: Displays the load measured at the output shaft as a percentage. This is also a short cut to set the 0% torque parameter ("Trq Null") by removing load from the output shaft, then writing a "0" to this value.

APPENDIX HART® Messages

COMMON HART® MESSAGES

HART® protocol maintains both standard and device specific informational messages that are displayed on the Communicator when various conditions occur.

Below is a table of typical Beck actuator messages and message sequences. It does not include all possible messages, only the most common.

Output Shaft Position Measurement Messages

Message	Description
"Process applied to the primary variable is outside the operating limits of the field device."	This is a standard HART-defined message that appears whenever the HART primary variable (Position signal) is outside the design or calibrated range. This message should be accompanied by a Beck-specific message with more detail.
"The Position Signal is less than -5% or greater than 105%."	This Beck-specific message indicates the DCM-3 is reading a Position signal not within the calibration range limits.
"Position signal in LOS."	This is a Beck-specific message. The DCM-3 is indicating that the Position signal is a problem and is intended to identify a CPS-5 or wiring failure. This is triggered when the Position signal is outside the minimum and maximum voltage limits.
"Position out of accurate measurement range."	This is a Beck-specific message. The DCM-3 indicates the Position signal is outside of the design range.
"Position sensing error."	This is a Beck-specific message. The DCM-3 circuitry for measuring the Position signal does not appear to be functioning properly.
"Analog output 1 and its digital representation are outside the operating range limits, and not responding to input."	This is a standard HART-defined message that appears whenever the position signal to the DCM-3 is outside the design or calibrated range. This message should be accompanied by a Beck-specific message with more detail.

Handswitch and Over-travel Limit Switch Message

Message	Description
"Motor power is blocked, check switches."	This message will appear if the DCM-3 detects a condition that prevents current flow to the motor.

Stall Protection Message

Message	Description
"Stall condition has been detected (see 'Stall Time' in the 'General Setup' menu)."	This is a Beck-specific message indicating that the actuator is in a stalled condition. This occurs if the actuator cannot reach the Demand position in the time allotted by the stall time setting (configurable from 30–300 seconds).

Demand, Torque and Temperature Measurement Messages

Message	Description
"Process applied to the non-primary variable is outside the operating limits of the field device."	This is a standard HART-defined message that appears whenever the Demand signal or Temperature are outside their design or calibrated ranges. This message should be accompanied by a Beck-specific message with more detail.
"The Demand Signal is outside of the intended limits (see Demand Setup menu)."	This Beck-specific message indicates the Demand signal is invalid.
"Demand out of accurate measurement range."	This is a Beck-specific message that the Demand signal is not only out of the calibrated range, but also out of the design range of the actuator. The lower and upper limits are 0.1 V dc and 5.5 V dc, respectively. Note that current input DCM-3 boards utilize a 250 Ohm input resistor to convert the current signal to voltage.
Demand Signal is out of limit.	This Beck-specific message indicates the Demand signal is too high to measure accurately. The upper limit is 5.5 V dc. Note that current input DCM-3 boards utilize a 250 Ohm input resistor to convert the current signal to voltage.
Demand sensing error.	This is a Beck-specific message. The Demand sensing circuitry does not appear to be functioning properly.
The Torque/Thrust is greater than the output rating.	This Beck-specific message defines an output shaft torque overload problem.
Motor power has been removed due to excessive output torque.	This Beck-specific message indicates the DCM-3 has removed power from the motor due to excessive output shaft torque load. The Handswitch must be in AUTO mode for this alarm to be accurate.
Torque/Thrust out of accurate measurement range.	This is a Beck-specific message. The DCM-3 is not able to read a valid signal from the Torque sensor.
Torque/Thrust sensing error.	This is a Beck-specific message. The DCM-3 circuitry for measuring the Torque signal does not appear to be functioning properly.
The temperature is outside of -40°F to 185°F.	This is a Beck-specific message indicating that the temperature at the DCM-3 is outside of the acceptable range.
Temperature out of accurate measurement range.	This is a Beck-specific message. The DCM-3 ambient temperature reading is extreme and cannot be accurately measured.
Temperature A/D Fail.	This is a Beck-specific message. The DCM-3 circuitry for measuring the ambient temperature does not appear to be functioning properly.
The Feedback Signal is enabled but the loop is open.	This is a Beck-specific message indicating that the Feedback sourcing circuit is unable to create the proper signal current. This message could result from the signal not being wired to an external load, or a wiring failure has occurred at some point between the actuator and the monitoring device.

APPENDIX HART® Messages

Questionable Configuration Messages

Message	Description
Analog output 1 and its digital representation are in fixed mode, and not responsive to input changes.	Standard HART-defined message that appears whenever the Feedback signal has been manually assigned a value. This message should be accompanied by a Beck specific message with more detail.
Feedback is in fixed mode.	A Beck-specific message indicating that the Feedback signal has been manually set to a fixed value and is not following the Position value.
Local control button pressed while locked-out.	A Beck-specific message indicating an incorrect combination of pushbuttons is being pressed on the local configuration interface, or the local control interface is disabled and a pushbutton is being pressed.
Loop Current Detected while under HART/FF Control.	A Beck specific alarm message that alerts the user that analog current is present on the Demand terminals, but the DCM-3 is in an Op Mode expecting digital control. Make certain the Op Mode parameter is set properly.
Loop Current Detected while set for LOS PAT.	A Beck specific alarm message that alerts the user that analog current is present on the Demand terminals, but the DCM-3 is set to a LOS mode intended to be used without an analog signal.

DCM-3 Failure Messages

Message	Description
Real-time Clock hardware failure.	This is a Beck-specific message. The data in the Real-time Clock appears invalid.
FRAM Memory has failed.	A Beck-specific message. The continuous built-in self-test cannot verify the memory for statistics information is operating properly.
Memory failure.	This is a Beck-specific message. The continuous built-in self-test cannot verify the microcomputer is operating properly.

Miscellaneous HART-Defined Messages

Message	Description
Field device has more status available.	This is a standard HART-defined message that appears whenever the DCM-3 signals the HART master that an alarm or other undesirable status exists. This is the HART protocol mechanism for displaying the other messages in this section. If this message is displayed without an additional message, the status cleared before the HART master read the additional status.
A reset or self-test of the field device has occurred, or power has been removed and reapplied.	This message is presented by the HART master if the DCM-3 has gone through a power-up reset sequence since the last communication with the master. This message is only displayed once after a reset.
A modification has been made to the configuration of the field device.	This message indicates that the DCM-3 has undergone a configuration change since the last time the HART master has reset the change flag. Many HART masters disregard the flag and do not report this message.
Field device has malfunctioned due to a hardware error or failure.	This message indicates that the continuous built-in self-test cannot verify the microcomputer is operating properly.

APPENDIX Serial Communication

COMMUNICATIONS

Local configuration of the Beck actuator can be accomplished using Serial commands through the DCM-3 Serial port.

CAUTION

Changes made to the actuator through Serial communications may not necessarily be reflected in asset management systems. Be sure to verify any changes made serially and make manual corrections to the asset management system if necessary.

The Beck Digital Control Module (DCM-3) is equipped with a Serial interface which allows for direct communication with a computer. Using a standard DB9 to USB cable, connect the DCM-3 to the computer using the DCM-3's DB9 connector (see below for location) and one of the computer's USB ports. Note: If your computer is equipped with an active COM port, a DB9 to DB9 cable may be utilized. See below for part numbers of cables available from Beck.

Once connected, communication can be established between the DCM-3 and the computer using a terminal emulation program, such as HyperTerminal®. This method of communication will allow for configuration, calibration and verification of actuator DCM-3 settings without the use of custom software applications.

Hyperterminal® is a product of Hilgraeve, Inc.

HyperTerminal® SOFTWARE

HyperTerminal is the standard ASCII terminal emulation software provided with Microsoft® Windows®. If using HyperTerminal®, the following instructions will assist in setup. Note that some variation to these instructions may be necessary depending on the version of HyperTerminal® being used.

After connecting the DCM-3 to the (Windows®-based) computer, access HyperTerminal® by clicking first on "Start", then "Programs", then "Accessories", then "Communications", then "HyperTerminal". Double-click on the "Hypertrm.exe" icon to start the program. Once HyperTerminal® is running, it is necessary to set up a file with the proper settings to communicate with the DCM-3. Proceed as follows:

1. If prompted to install a modem, answer "no". Proceed to enter a name (e.g., "DCM-3") and select an icon (any will suffice) in the "Connection Description" box. Click the "OK" button.
2. The "Connect to" box should open next. At the bottom of the box, set the "Connect using" selection to the appropriate USB (or COM) port that has been connected to the DCM-3. Click the "OK" button.
3. The port properties box should open next; this is where the communication settings are established. The correct settings are:
   a. Bits per second = "1200"
   b. Data bits = "8"
   c. Parity = "none"
   d. Stop bits = "1"
   e. Flow control = "none"
4. With the appropriate settings entered from Step 3, above, click "OK". Communications should now be enabled.
5. Press the "Enter" key twice. "OK" should be displayed indicating that HyperTerminal® is communicating with the DCM-3.

Beck Serial Communications Cables

DB9 to USB-A
P/N 20-0511-60

DB9 to DB9
P/N 20-0511-14

*Note cables may differ in appearance from depiction.

APPENDIX Serial Commands

Serial commands can be used for a variety of functions including changing the operating configuration of the actuator, verifying operation settings, calibration and accessing diagnostic information. There are four different types of commands:

Dual-purpose commands. Used to either modify actuator configuration settings or display the settings already set in the actuator. In order to set or make a change to the settings, the command requires an argument (***n***). If the command is used for display purposes only, the argument is omitted. Examples include "temperature" and "demlos".

Display only commands. Used to display diagnostic or operating information such as present signal values. No arguments are required. Examples include the "stat" command and "signals" command.

Set only commands. Serve only to make a parameter change. Typically, they apply to the actuator calibration. This type of command requires an argument, but unlike dual-purpose commands, they return an error message when entered without an argument. Examples include the “charset” and “trimfdbk4mA” command.

Execute action commands. Serve to reset, enable or disable features. Entering these commands produces an immediate action. Examples include the "reset" and "restoremodes" command.

Following are available commands and details. The command description explains the use or uses of the command, while the argument column describes any applicable arguments. Arguments are denoted as ***n***. Note that the commands described as "sets and/or displays" signify dual-purpose commands that can be used with or without an argument for setting or verifying configuration settings.

The following is a categorized list of Serial commands available through the DB9 interface. These commands are described in detail on the pages that follow.

General Configuration Commands

alarmout	restoremodes
alarmoutmask	sernum
configformodel	stallprot
drvdir	stalltime
limitalarm	stepsize
opmode	

Torque Sensing Commands

ovtstop	torqalarm
ovtstoplevel	torqconst
torq	torqenable
torq0k	torqprof
torq0pct	

HART® Configuration Commands

harttype	polladdr

Diagnostic and Information Commands

demsource	signals
help	stat
ledtest	temperature
reset	unstall

Demand Signal Commands

dem0pctma	demlosgtp delay
dem100pctma	trimdem4ma
demlos	trimdem20ma
demlosgtp	

Output Shaft Position Sensing Commands

cpsvat0pct	travel

Demand Characterizer Commands

charclear	charset
charlist	demfunc

Feedback Signal Commands

fdbk0pctma	trimfdbk4ma
fdbk100pctma	trimfdbk20ma
fdbkfunc	iomode

General Configuration Commands

Command	Description	Argument *n* and Information
alarmout ***n***	Sets/displays the polarity of the alarm output solid state relay.	***n*** = "0": open on Alarm ***n*** = "1": closed on Alarm Upon loss of power, the relay is open regardless of the setting.
alarmoutmask ***n***	Sets/displays (in hexadecimal format) which conditions will cause an alarm: 0x00000001 - Demand Loss of Signal 0x00000002 - Torque High 0x00000004 - Stall Condition 0x00000008 - Torque Stop 0x00000010 - Stop/Limit 0x00000020 - Feedback Loss of Signal 0x00000040 - Temperature too High/Low 0x00000080 - Position Outside of Limits 0x00000100 - Real-time Clock Failure 0x00000200 - Torque Measurement Failure 0x00000400 - Position Analog/Digital Circuit Failure 0x00000800 - Demand Measurement Failure 0x00002000 - Position Loss of Signal 0x00004000 - Temperature Measurement Failure 0x00008000 - Memory Failure 0x00010000 - Invalid Button Pressed 0x00020000 - Demand too High	***n*** = "0x0": no listed condition causes a status alarm ***n*** = "0xffffffff": all listed conditions cause a status alarm ***n*** = hexadecimal value for specific condition(s) which will cause an alarm. Multiple conditions may be selected by performing a hexadecimal addition of the condition values; e.g., Stall Condition and Torque Stop alarms -- *hex* 0x04 + 0x08 = 0x0C.
configformodel ***n***	Sets certain DCM-3 default values based on the actuator Serial number. These values are direction rotation for an increasing CPS-5 signal, expected range of CPS-5 signal, and the maximum travel.	***n*** = "1": executes command
drvdir ***n***	Sets/displays the actuator output shaft rotation direction resulting from an increasing Demand signal.	***n*** = "0": CW rotation ***n*** = "1": CCW rotation
limitalarm ***n***	Sets/displays alarm action if the actuator travels outside of the electronic limits and contacts an over-travel limit switch.	***n*** = "0": mute (no alarm) ***n*** = "1": always
opmode ***n***	Sets/displays the mode that controls the Demand signal source. This mode selects analog or digital control.	***n*** = "0": analog Demand ***n*** = "1": digital Demand ***n*** = "2": run CW ***n*** = "3": run CCW ***n*** = "4": stay ***n*** = "5": stop
restoremodes ***n***	Returns the DCM-3 settings to the original factory configuration.	***n*** = "1": executes command
sernum ***n***	Sets the actuator Serial number.	***n*** = Serial number
stallprot ***n***	Sets/displays stall protection state.	***n*** = "0": disabled ***n*** = "1": enabled
stalltime ***n***	Sets/displays time the actuator runs in one direction before stall alarm is activated.	***n*** = seconds: acceptable range is 30–450 seconds.
stepsize ***n***%	Sets/displays the size of one incremental movement of the output shaft.	***n*** = % of travel desired: acceptable range is 0.10%–2.5%. Include the "%" symbol after the number, otherwise the unit of measure will be degrees.

APPENDIX Serial Commands

Torque Sensing Commands

Command	Description	Argument *n* and Information
ovtstop *n*	Sets/displays whether motor power will be removed during severe overtorque conditions. Torque sensing must be installed and enabled.	*n* = “0”: disabled *n* = “1”: enabled
ovtstoplevel *n*	Sets/displays the torque magnitude associated with severe output shaft torque conditions.	*n* = allowable torque magnitude (without stopping motor) in percent of actuator rating. May be set from 70% to 150% (factory set to 115%).
torq	Displays the torque on the output shaft measurement as a percentage of actuator rating. Also displays related values such as torq0k and torqconst.	No argument.
torq0k *n*	Sets/displays the value of DCM-3 internal measurement corresponding to 0% torque on the output shaft.	*n* = the zero torque value in counts (noted on label inside DCM-3 cover).
torq0pct *n*	This is an alternate method for setting torq0k, and is useful when the correct torq0k value is not already known. To use this command, remove all load from the output shaft, then execute torq0pct with argument “0” to let the DCM-3 know that the torque sensing should be reading 0%.	*n* = “0”
torqalarm *n*	Sets and/or displays the torque magnitude associated with the first level of alarm.	*n* = allowable torque magnitude without alarm, in percent of actuator rating.
torqconst *n*	Sets/displays the value of DCM-3 internal measurement corresponding to the torque span (the measurement at 100% minus the measurement at 0%).	*n* = the torque span value in counts (noted on label inside DCM-3 cover).
torqenable *n*	Sets/displays the enabled or disabled status of torque sensing.	*n* = “0”: disabled *n* = “1”: enabled
torqprof	Displays a three table column: 1. Maximum travel divided into 10 segments 2. peak torque measured in each segment with motor running CW 3. peak torque measured in each segment with motor running CCW	No argument.

HART® Configuration Commands

Command	Description	Argument *n* and Information
harttype ***n***	Sets/displays the DCM-3 HART DD (Device Description). "239" is the proper DD; other DDs are for temporary use if the new DD is not available.	***n*** = "1": ESR-D ***n*** = "10": Beck DCM ***n*** = "239": Beck MK2
polladdr ***n***	Sets/displays the polling address used by the HART master to find individual devices if the HART bus has more than one device.	***n*** = the polling address (a number between "0" and "15"). Unless multiple HART devices are connected in parallel on a single bus, the polling address should be set to "0".

Diagnostic and Information Commands

Command	Description	Argument *n* and Information
demsource	Provides a readout of information regarding the Demand on the actuator including the source of the Demand signal (Handswitch, demlos or Analog I/P), mode (follow, hold, CW, CCW, Stay or Stop), currently applied Demand signal as a %, the Demand function (linear, square root, square, or special), and the Demand out as a % (dem out shows the signal adjusted when using a non-linear Demand function (demfunc command)).	No Argument
help ***n***	Displays help text for a specific command or lists all available Serial commands.	***n*** = command name ***n*** = "all"
ledtest ***n***	Tests the functionality of the DCM-3 LEDs individually or as a group. If "all" is selected, the command will consecutively cycle through each LED twice. If an individual LED is selected, it will flash 12 times.	***n*** = "1": DEMAND ***n*** = "2": POSITION ***n*** = "3": TRQ/THRUST ***n*** = "4": STALL ***n*** = "5": TEMP ºF ***n*** = "6": FB OPEN ***n*** = "7": STOP/LIMIT ***n*** = "8": ACKNOWLEDGE ***n*** = "100": FWD ***n*** = "101": REV ***n*** = "102": STAT ***n*** = "All"
reset ***n***	Performs the same reset sequence as when power is removed and reapplied.	***n*** = "1": must equal "1" for command to execute.
signals	Displays the present DCM-3 readings of four signals: Position signal from CPS-5 Demand Feedback Torque	No argument = signal readings are displayed. ***n*** = "all": an extended set of data is displayed.
stat	Displays information on the status of the actuator, including: Time / Date, Demand, Position, Error (Demand minus Position), Step size, Dead band, Motor Status, Motor Run Time, Line Frequency, Motor Starts, Motor Reversals/Stalls, Number of Overtorque conditions, Positive & Negative Peak Torque (%), CW and CCW Inhibitor Status, Alarms	No argument
temperature ***n***	Displays three values describing the ambient temperature in the actuator. Low extreme, present, high extreme. Can also change the temperature units.	No argument = temperatures are displayed. ***n*** = "F": changes units to Fahrenheit ***n*** = "C": changes units to Celsius
unstall	Resets the Stall Protection alarm to restore power to the motor. If the motor is still physically stalled, the Stall Protection alarm will recur.	No argument.

APPENDIX Serial Commands

Demand Signal Commands

Command	Description	Argument *n* and Information
dem0pctma ***n***	Sets/displays the Demand signal value that corresponds to 0% actuator position.	***n*** = Demand signal as a decimal in mA. Minimum value is 0.50; maximum value is 100% Demand less 4.00 mA (e.g., if 100% Demand is 20.00 mA, the 0% value must be set for 16.00 mA or less).
dem100pctma ***n***	Sets/displays the Demand signal value that corresponds to 100% actuator position.	***n*** = Demand signal as a decimal in mA. Minimum value is 0% Demand plus 4.00 mA (e.g., if 0% Demand is 4.00 mA, the 100% value must be set for 8.00 mA or greater). Maximum value is 21.00 mA.
demlos ***n***	Sets/displays the Demand signal threshold, below which the DCM-3 recognizes the signal has been lost. The threshold is entered as a value in mA. This command also sets/displays the action initiated by the actuator during LOS (Loss Of Signal). LOS action options are "sip" (stay in place) or "gtp" (go to position). Demlos always reports both settings, but only sets one argument at a time. Demlos must be used twice to set both the threshold and action.	***n*** = Demand signal in mA below which LOS occurs (e.g., the typical value for a 4–20 mA system is 3.20). **-OR-** ***n*** = "sip", "gtp" or "pat". The "pat" argument acts the same as "sip", but also suppresses the alarm--this is used in some pulsed applications.
demlosgtp ***n***	Sets/displays the position to which the actuator will run upon loss of the Demand signal (LOS). This command has no effect if the actuator is set to "sip" (stay in place).	***n*** = desired position of actuator expressed as a percentage of actuator travel in decimal form (e.g., 50% = 50.00).
demlosgtp delay ***n***	Sets the time delay in seconds before the actuator will move to the position set in “demlosgtp”. Entering this command without an argument will return the present gtp and delay settings.	***n*** = time delay in seconds. Acceptable values are 0 (default) to 25.5.
trimdem4ma *4*	Trims the Demand analog-to-digital sensing circuit to be accurate at 4 mA. This command should only be used when the Demand signal at the actuator is exactly 4.0 mA. Trim is factory set and should not normally require recalibration.	"*4*" is the only acceptable value; this trim can only be performed at 4 mA.
trimdem20ma *20*	Trims the Demand analog-to-digital sensing circuit to be accurate at 20 mA. This command should only be used when the Demand signal at the actuator is exactly 20.0 mA. Trim is factory set and should not normally require recalibration.	"*20*" is the only acceptable value; this trim can only be performed at 20 mA.

Output Shaft Position Sensing Commands

Command	Description	Argument *n* and Information
cpsvat0pct ***n***	Sets/displays the DCM-3 voltage setting used to determine 0% signal from the CPS-5. Voltage is dependent upon the actuator model. Typically, this setting does not need to be changed.	***n*** = desired voltage as a decimal (carried out to 3 decimal places). The standard signal range for an actuator configured for 100 degrees of output shaft rotation is approx. 1.000–5.000 V.

Output Shaft Position Sensing Commands

Command	Description	Argument *n* and Information
travel ***n***	Sets/displays the number of degrees that represents 100% travel. This command does not shift the 0% position; when increasing travel from a reduced travel setting, the 0% position may need to be changed first to keep travel within acceptable end points. The end points are defined by the CPS-5 voltage range.	***n*** = desired length of travel in degrees. This value cannot exceed the maximum output shaft rotation of the actuator.

Demand Characterizer Commands

Command	Description	Argument *n* and Information
charclear ***n***	Clears a preconfigured Demand characterizer curve node by setting it to "unused". Any node numerically higher will be set to "unused" also.	***n*** = node number: between 1 and 21.
charlist ***n***	Displays the X-values and Y-values of Demand characterizer curve node(s).	***n*** = node number: between 1 and 21. ***n*** = "all": displays all nodes
charset ***n1***, ***n2***, ***n3***	Sets the X-values and Y-values of a specific node of the characterizer curve. The three arguments must be separated by commas.	***n1***,***n2***,***n3*** = (n1 is node number to modify, n2 is X-value as a %, n3 is Y-value as a %)
demfunc ***n***	Sets/displays the Demand signal characterization function.	***n*** = "0": linear ***n*** = "1": square root ***n*** = "4": special curve ***n*** = "5": square

Feedback Signal Commands

Command	Description	Argument *n* and Information
fdbk0pctma *n*	Sets/displays the mA value of the Feedback signal that represents the 0% output shaft position. May also be set for decreasing direction of Feedback. See page 29.	n = desired Feedback signal in mA at 0% output shaft position. Minimum value is 3.00 mA and the maximum must be at least 4.00 mA less than the Feedback signal value for the 100% output shaft position.
fdbk100pctma *n*	Sets/displays the mA value of the Feedback signal that represents the 100% output shaft position. May also be set for decreasing direction of Feedback. See page 29.	*n* = desired Feedback signal in mA at 100% output shaft position. Minimum value must be at least 4.00 mA greater than the Feedback signal value for the 0% output shaft position. Maximum value is 21.00 mA.
fdbkfunc *n*	Sets/displays the curve used to calculate the Feedback signal.	*n* = "0": linear *n* = "1": inverse Demand (curve enabled)
trimfdbk4mA *n*	Trims the Feedback signal at 4 mA. Calibrated at the factory, should not normally require calibration.	*n* = present Feedback signal from the DCM-3 in mA.
trimfdbk20mA *n*	Trims the Feedback signal at 20 mA. Calibrated at the factory, should not normally require calibration.	*n* = present Feedback signal from the DCM-3 in mA.
iomode *n*	Sets/displays the function of a DCM-3 connector pin. May be enabled for Feedback or potentiometer.	*n* = "0": none *n* = "1": Feedback enabled *n* = "2": potentiometer power enabled.

INDEX

Appendices 50–65
HART® Communication 50–55
HART® Messages 56–58
Serial Communication 59
Serial Commands 60–65
Applications Reviews 67
Auxiliary Limit Switches 21
Setting Switches 21
Configuration/Calibration 20–34
Contactless Position Sensor (CPS-5) 16, 41
Demand Calibration 25
Demand Characterization Curves 27–28
Digital Control Module (DCM-3) 16–19
Interfaces 17
Overview LEDs 18
Pushbutton Controls 19
Status Indication LEDs 19
Direction of Output Shaft Rotation 22
Electronics 16–19
General Specifications 4–5
Handswitch 9, 42
Handwheel 9
HART® Communication 50–55
HART® Device Description Menu 50
HART® Messages 56–58
How to Obtain Service 67
Installation 10–14
Electrical 13
Linkage Requirements 11
Link-Assist™ 11
Mechanical 10–12
Wiring 14
Introduction 2
Limit Switches (Over-travel) 20
Setting Switches 20–21
Linkage Kits 11
Loss of Demand Signal (LOS) 26
Maintenance 35–44
CPS-5 41
Over-travel Limit & Auxiliary Switches 39
DCM-3 Board 40
Lubrication/Gearing 36
SLM 37–38
Handswitch 42
Gaskets 42, 44
Motor Assembly 35, 44
Motor Capacitor & Resistor Network 35, 44
Mounting Instructions 10
Orientation Options 10
Outline Dimension Drawings 6–7
Position Feedback Signal 29–30
Power Quality 13
Precautionary Information 8
Product Demonstrations 67
Restore Factory Settings 23
Safety Precautions 8
Self-Locking Mechanism (SLM) 37–38
Serial Commands 65
Serial Communication 59
Services 67
Site Surveys 67
Spare Parts, Recommended 44
Specification Writing 67
Stall Protection 34
Start-up 15
Step Size 23
Storage Information 8
Table of Contents 3
Temperature Sensing 33
Torque Sensing (Optional) 31–32
Live/Historical Torque 31–32
Overtorque Alarm 32
Overtorque Protection 32
Travel (Degrees Rotation) 24
Change Travel 24
Troubleshooting 45–49
Warranty Statement 67

SERVICES

PRODUCT DEMONSTRATIONS

Each of Beck's Sales Engineers has access to a complete set of actuator models so that he can demonstrate virtually any of their features at your location. In order to arrange to see a Beck actuator in your plant or office, contact Beck's Sales Department.

SITE SURVEYS

Beck Sales Engineers are available to discuss your process control requirements. Often a visit to your location is the best way to gain a thorough understanding of your needs, in order to meet them most accurately and completely.

Mounting hardware, torque requirements, linkage, control signal information, and optional equipment can be analyzed most effectively at the work site. Beck's analysis at the job site can help ensure that specifications are accurate, especially in the case of complex applications.

APPLICATION REVIEWS

By sharing your needs with a Beck Sales Engineer you can take advantage of the best application advice for the type of control you need. This review will yield a better understanding of the versatility of Beck drives for your installations, as well as complete details on options and accessories to make the process as effective as possible.

SPECIFICATION WRITING

Beck provides specification writing assistance in order to help you specify and order the right drives for your applications. Beck Sales Engineers will work with you to make it easier for you to obtain the proper equipment and give you confidence that no details are overlooked.

HOW TO OBTAIN SERVICE

Factory repair of drives or subassemblies is available for both normal and emergency service. To assure prompt processing, contact the factory to receive a Returned Material Authorization (RMA) number. If a repair estimation is desired, please send the name and phone number of your contact for service authorization. It is helpful to include a description of the work desired with the shipment or, in the event of a problem, the malfunction being experienced.

THREE YEAR LIMITED WARRANTY STATEMENT*

Harold Beck & Sons, Inc. (Beck) warrants that our equipment shall conform to Beck's standard specifications. Beck warrants said equipment to be free from defects in materials and workmanship. This warranty applies to normal recommended use and service for three years from the date on which the equipment is shipped. Improper installation, misuse, improper maintenance, and normal wear and tear are not covered.

The Buyer must notify Beck of any warranty issues within 37 months of original shipment date and return the goods in question, at Buyer's expense, to Beck for evaluation. If the product fails to conform to the warranty, Beck's sole obligation and the Buyer's exclusive remedy will be: 1) the repair or replacement, without charge, at Beck's factory, of any defective equipment covered by this warranty, or 2) at Beck's option, a full refund of the purchase price. In no event will Beck's liability exceed the contract price for the goods claimed to be defective.

THIS WARRANTY IS EXPRESSLY IN LIEU OF ANY OTHER EXPRESS OR IMPLIED WARRANTY, INCLUDING IMPLIED WARRANTIES OF MERCHANTABILITY AND FITNESS FOR A PARTICULAR PURPOSE, AND ALL OTHER OBLIGATIONS OR LIABILITIES OF BECK. In no case shall Beck be liable for any special, incidental or consequential damages based upon breach of warranty, breach of contract, negligence, strict tort, or any other legal theory. Such damages include, but are not limited to, loss of profits, loss of revenue, loss of use of the equipment or any associated equipment, cost of capital, cost of any substitute equipment, facilities or service, downtime, the claims of third parties including customers and injury to property.

Buyer acknowledges its responsibilities under OSHA, related laws and regulations, and other safety laws, regulations, standards, practices or recommendations that are principally directed to the use of equipment in its operating environment. Buyer acknowledges that the conditions under which the equipment will be used, its use or combination with, or proximity to, other equipment, and other circumstances of the operation of such equipment are matters beyond Beck's control. **Buyer hereby agrees to indemnify Beck against all claims, damages, costs or liabilities (including but not limited to, attorney's fees and other legal expenses), whether on account of negligence or otherwise, except those claims based solely upon the negligence of Beck and those claims asserted by Beck's employees which arise out of or result from the operation or use of the equipment by Beck's employees.**

***Note: Internal water damage is not covered by warranty.**

© Copyright 2013 by Harold Beck & Sons, Inc.
Beck Actuators are covered by the following patents: 6,563,412 and 6,639,375.

81-0002-01B

Declaration of Incorporation of Partly Completed Machinery

Manufacturer:
Harold Beck and Sons, Inc
11 Terry Drive
Newtown, PA 18940
USA
1 (215)-968-4600

Authorized Representative in Europe:
David Riley, IPT Engineering Ltd

EU:
Ar Merdy
29190 Lannedern
Bretange
France

UK:
Abbeyville, Brake Road, Walesby
Newark, Nottinghamshire NG22 9N1,
United Kingdom

declare that:

Brand: Beck

Type and Description of Equipment: Rotary Actuator / Control Drive

Product: Models: 11-11X, 11-15X, 11-16X, 11-20X, 11-21X, 11-26X, 11-30X, 11-31X, 11-36X, 11-40X, 11-41X, 11-43X, 11-46X (where 'X' denotes Control Type – 3, 4, 5, 6, 7, 8 or 9)

are in conformity with the provisions of the following EC Directives:

Machinery Directive (MD): 2006/42/EC

The following harmonised standards have been applied: EN ISO 12100:2010

The partly completed machinery specified in this Declaration must not be put into service until the machinery into which it is to be incorporated has been declared in conformity with the Directive 2006/42/EC.

The following essential requirements of the Machinery Directive (Annex I) have been applied:
1.1.2, 1.1.3, 1.1.5, 1.2.1, 1.2.4.1, 1.3.1, 1.3.2, 1.3.4, 1.3.6, 1.3.7, 1.3.8, 1.5.1, 1.5.2, 1.5.5, 1.5.6, 1.5.7, 1.5.10, 1.5.11, 1.6.2, 1.7.1, 1.7.3, 1.7.4

The partly completed machinery specified in this Declaration are also in conformity with the provisions of Directives 2014/35/EU (Low Voltage) and 2014/30/EU (Electromagnetic Compatibility).

Technical documentation has been compiled in accordance with Annex VII, Pt. B of the Machinery Directive. This documentation will be made available electronically if requested by the national authorities.

(Signature)

Edward Skypala
Engineering Manager

1 March 2022
(Date of Issue)