80-1100-00
Rev. 6.6

**MODELS 11-1__**
**11-2__**
**11-3__**
**11-4__**

BECK®

# INSTRUCTION MANUAL

For actuators manufactured after March 2019.

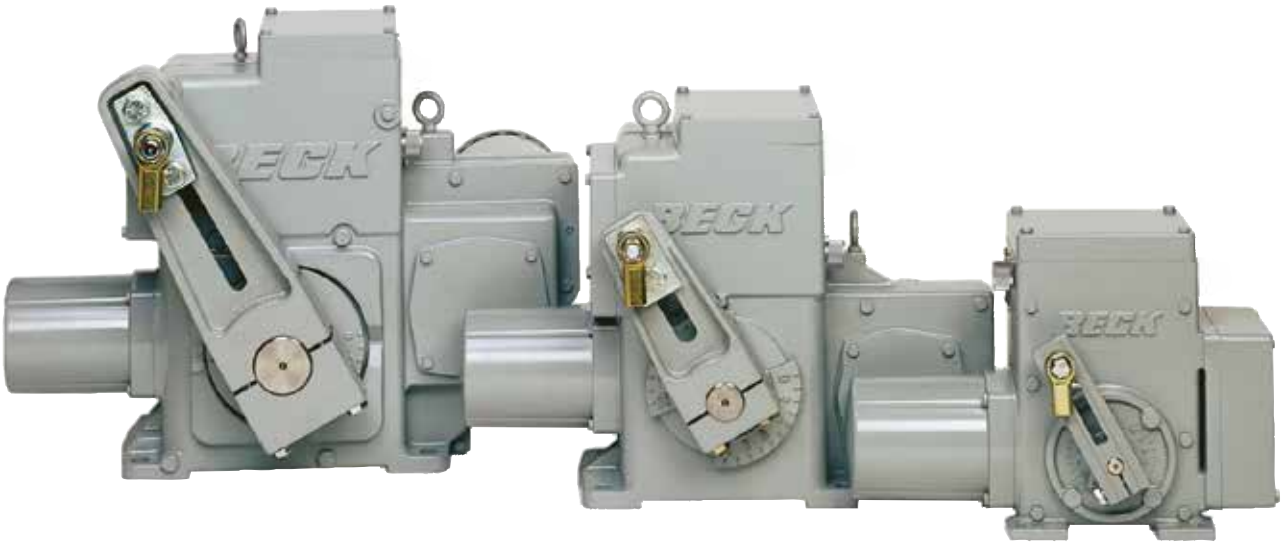

C US

*ELECTRIC ACTUATORS FOR INDUSTRIAL PROCESS CONTROL*

# INTRODUCTION

This manual contains the information needed to install, operate, and maintain Beck Group 11 actuators, manufactured by Harold Beck & Sons, Inc. of Newtown, Pennsylvania.

The Group 11 actuator is a powerful control package designed to provide precise position control of dampers, valves, fluid couplings and other devices requiring up to 1,800 lb-ft (2 440 N•m) of actuator torque. Exceptionally stable and trouble-free, these rotary actuators are in use throughout the world in valve and damper applications.

**IMPORTANT: This manual contains information that will make installation simple, efficient, and trouble-free. Please read and understand the appropriate sections in this manual before attempting to install or operate your actuator.**

**This manual, along with Beck Manual Supplement 80-1100-14, is provided with applicable Group 11 & Group 11E hazardous location actuators.**

# TABLE OF CONTENTS


**Introduction** ..... **2**

**General Specifications** ..... **4**

**Outline Dimension Drawings** ..... **6**

**Summary of Control Options** ..... **12**

**Precautionary Information** ..... **13**

**Component Location** ..... **14**

**Installation** ..... **15**

- **Mechanical** ..... **15**
- **Electrical** ..... **20**
- **Wiring** ..... **21**

**Start-up** ..... **27**

**Operation** ..... **28**

**Calibration** ..... **30**

- **Switches** ..... **31**
- **Direction Change** ..... **33**
- **Feedback Signal** ..... **35**
- **Demand Signal** ..... **38**

**Maintenance** ..... **43**

- **Routine** ..... **43**
- **Component Replacement** ..... **44**
- **Component Detail** ..... **52**
- **Spare Parts & Part Numbers** ..... **55**

**Troubleshooting** ..... **57**

**Appendices** ..... **59**

- **CPS-5 Functional Block Diagrams** ..... **59**
- **CPS-5 Data** ..... **60**
- **Optional LED Display** ..... **61**

**Index** ..... **62**

**Services** ..... **63**

# GENERAL SPECIFICATIONS

| Actuator Power | 120 V ac, single-phase, 60 Hz (Standard), 50 Hz (Optional)<br>208, 240, 380, 415, 480 & 575 V ac, 50 or 60 Hz (Optional) | Allowable Tolerance | +10%<br>-15% |
|---|---|---|---|

**Maximum Current (Amps) by Model***

| | | Voltage (V ac) | | | | | | |
|---|---|---|---|---|---|---|---|---|
| **Model** | **Maximum Power (VA)** | **120** | **208** | **240** | **380** | **415** | **480** | **575** |
| 11-15_ / 11-16_ | 55 | .45 | .26 | .23 | .14 | .13 | .11 | .09 |
| 11-20_ / 11-26_<br>11-30_ / 11-36_ | 110 | .88 | .51 | .44 | .28 | .25 | .22 | .18 |
| 11-40_ / 11-46_ | 400 | 3.1 | 1.8 | 1.6 | .98 | .89 | .78 | .65 |

*For specific motor currents, see page 54.

| | |
|---|---|
| Operating Conditions | -40° to 85°C (-40° to 185°F)<br>0 to 100% relative humidity, non-condensing |
| Demand Signal Options, with Electronic Signal Receiver (ESR-5) | 0–5 mA, 1–5 mA, 4–20 mA, 10–50 mA, 1–5 V dc, -10 to 10 V dc |
| Demand Signal Span Adj. | 50% to 400% of span (except -10 to 10 V dc) |
| Demand Signal Zero Adj. | -100% to +275% of span (except -10 to 10 V dc) |
| Deadband | 0.6% of span (recommended deadband for most applications). Narrower and wider deadbands are available. |
| Sensitivity | 25% of deadband. |
| Direct AC Control | 120 V ac for 2-position, multi-position or modulating V ac control |
| Feedback Signal Options, with Contactless Position Sensor (CPS-5) | 1–5 mA, 4–20 mA, 10–50 mA, 1–5 V dc, 0–16 V dc, -10 to +10 V dc |
| Output Stability | 0.25% of span from 102 to 132 V ac<br>±0.03% of span/°C for 0 to 50°C, ±0.05% of span/°C for -50° to 85°C |
| Linearity | ±1% of span, max. independent error |
| Hysteresis | 0.25% of span at any point |
| Isolation | Max. leakage of 10 µA at 60 V rms, 60 Hz from output to ground |
| Film Potentiometer | 1,000 ohms |
| Max. Voltage | 40 V |
| Wattage | 2 W max. |
| Linearity | ±0.5% |
| Max. Wiper Current | 1 mA |

| | |
|---|---|
| Action on Loss of Power | Stays in place. |
| Action on Loss of Input Signal (Power On) | Stays in place or moves to full travel or zero position. Drives to any preset position with optional switch assembly on Models 11-__7 and 11-__8. Field adjustable. |
| Stall Protection and Annunciation (Optional) | If the motor tries to run in one direction for more than 300 seconds, the Stall Protection Module will shut off power to the motor and a solid state relay will change state. The relay is rated for 120 V ac or dc, 10 VA. |
| Limit Switches | Two SPDT, one for CW and one for CCW limit of travel. Actuators having position sensing capability (Options 5 thru 8), have over-travel limit switches set 1/2° outside the CW and CCW travel range (typically, -0.5° and 100.5° or 90.5°). Actuators without position sensing (Options 3 and 4), have end-of-travel limit switches set at the CW and CCW travel range (typically, 0° and 100° or 90°). |
| Auxiliary Switches | Up to four 6 A, 120 V ac (0.5 A, 125 V dc) switches available. Switches are labeled S1-S4 and are cam-operated, field-adjustable. S1 and S4 are set to operate just before reaching the CCW travel limit. S2 and S3 are set to operate just before reaching the CW travel limit. |
| Handswitch | Permits local electrical operation, independent of controller signal. Standard on all units. An auxiliary contact is available as an option for remote auto indication (rated 2.5 A at 120 V ac; 2.0 A at 28 V dc). |
| Handwheel | Provides manual operation without electrical power. |
| Motor Assembly | 120 V ac, single-phase, no-burnout, non-coasting motor has instant magnetic braking. Requires no contacts or moving parts. Can remain stalled for approx. 4 days (cumulative) without damaging the gear train. |
| Gear Train | High-efficiency, precision-cut, heat-treated alloy steel and ductile iron spur gears. Interchangeable gear modules permit field change of torque and timing. |
| Mechanical Stops | Prevent overtravel during automatic or manual operation. |
| Enclosure | Precision-machined, aluminum alloy castings coated with corrosion-resistant polyurethane paint, provide a rugged, dust-tight, weatherproof enclosure. Actuators designed for hazardous classified locations are also available. Type 4X; IP66/IP68, 3 meters/48 hours*.<br>*Internal water damage is not covered by warranty. |
| Maximum Output Shaft Rotation | 100 degrees (Models 11-15_, 11-20_, 11-30_, 11-40_)<br>90 degrees (Models 11-16_, 11-26_, 11-36_, 11-46_) |
| Mounting Orientation | Any orientation—no limitations. |
| Standards** | CSA Labeled (US & Canada); CE Compliant; UKCA Compliant |

**NOTE: May not be available with all options and models. For more information, please call Beck at 215-968-4600.

# OUTLINE DIMENSION DRAWINGS

## MODEL 11-15_ SPECIFICATIONS

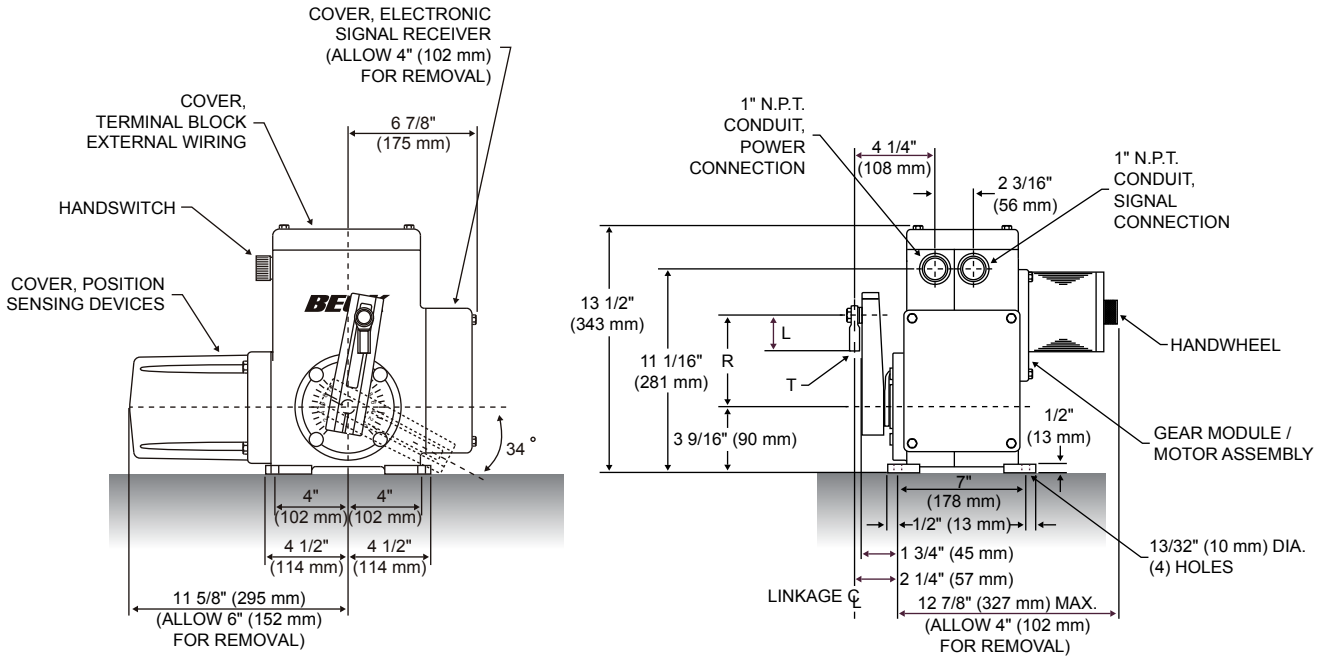


### Crank Arm

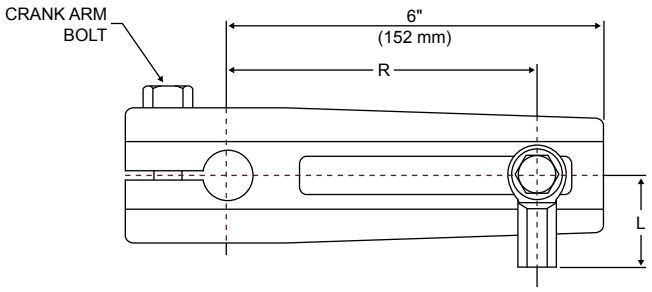


ADJUSTABLE RADIUS "R" 1 1/2" (38 mm) TO 5 1/8" (130 mm)

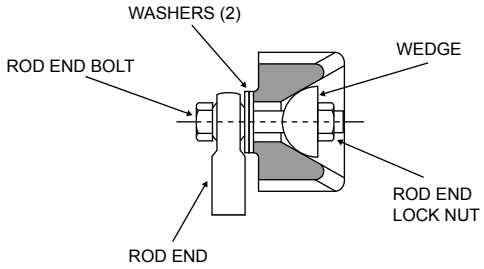


### *Recommended Screw Torques*

| | | | Torque | |
|---|---|---|---|---|
| | *Screw Size (in.)* | *Wrench Size (in.)* | *lb-ft* | *N•m* |
| Crank Arm Screw | 1/2-13 | 3/4 | 75 | 102 |
| Rod End Screw | 1/2-13 | 3/4 | 35 | 47 |
| Rod End Lock Nut | 1/2-13 | 3/4 | 35 | 47 |
| Body Screw | 5/16-18 | 1/2 | 10 | 14 |
| Body Screw | 3/8-16 | 9/16 | 20 | 27 |
| Cover Screw | 5/16-18 | 1/2 | 10 | 14 |
| Motor / Gear Module Screw | 1/4-20 | 7/16 | 6 | 8 |

### *Model 11-15_ Crank Arm Part Numbers & Model Information*

| | |
|---|---|
| Crank Arm Assembly | 10-3491-05 |
| Crank Arm | 10-3491-02 |
| Crank Arm Screw (1) | 30-0306-56 |
| Washer (2) | 30-0313-03 |
| Wedge | 11-8060-02 |
| Rod End Screw | 30-0306-56 |
| Rod End Lock Nut | 30-0309-11 |
| Rod End | 12-2840-02 |
| Dim. "L" (Length) | 2 1/8" (54 mm) |
| Dim. "T" (Thread) | 1/2-20 x 1-3/16" (30 mm) |
| Output Shaft Diameter | 3/4" (19 mm) |
| Approximate Weight | 50 lbs (23 kgs) |
| Max. Overhung Load | 750 lbs (340 kgs) |

# MODEL 11-16_ SPECIFICATIONS

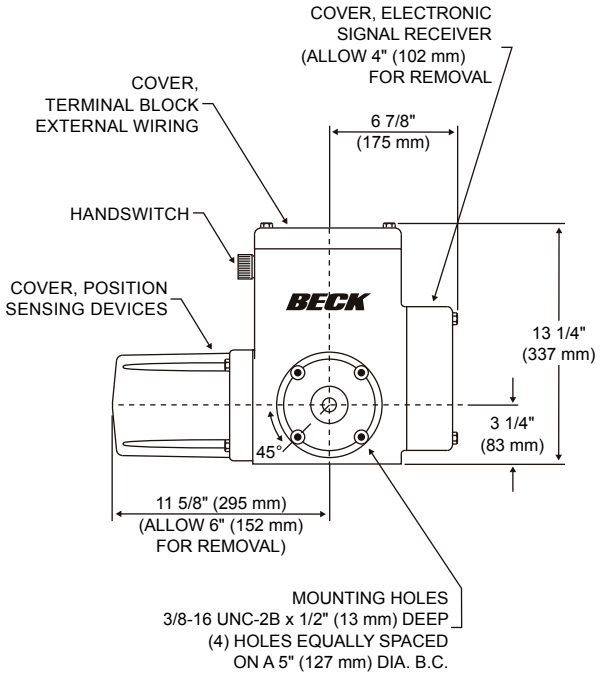


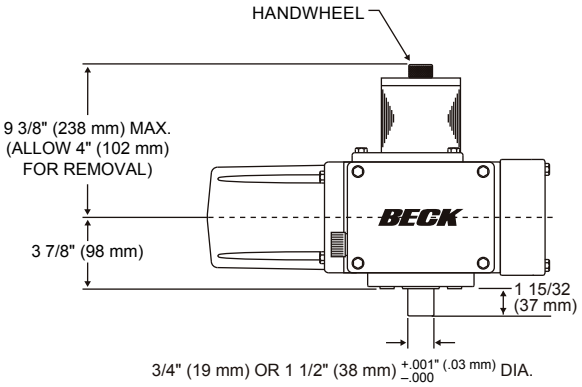


## TYPICAL VALVE MOUNTING

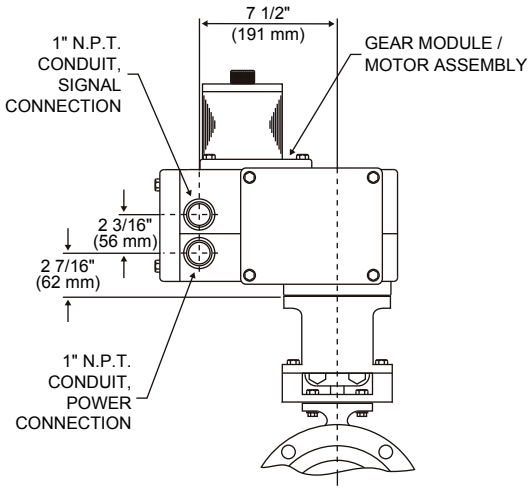


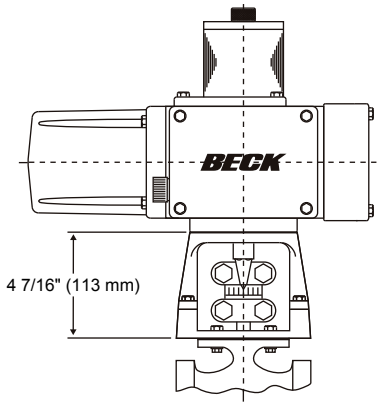


## *Model Information*

| | |
|---|---|
| Approximate Weight | 56 lbs. (25 kg) |
| Maximum Overhung Load | 750 lbs. (340 kg) |

## *Recommended Screw Torques*

| | *Screw Size (in.)* | *Wrench Size (in.)* | *Torque* | |
|---|---|---|---|---|
| | | | *lb-ft* | *N•m* |
| Coupling Screw | - | -- | * | * |
| Mounting Bracket Screw (Flat Head) | 3/8-16 | - | 25 | 34 |
| Body Screw | 5/16-18 | 1/2 | 10 | 14 |
| Body Screw | 3/8-16 | 9/16 | 20 | 27 |
| Cover Screw | 5/16-18 | 1/2 | 10 | 14 |
| Motor / Gear Module Screw | 1/4-20 | 7/16 | 6 | 8 |

*Varies per application. Refer to the valve mounting specification sheet shipped with your actuator.

# OUTLINE DIMENSION DRAWINGS

## MODEL 11-20_ & 11-30_ SPECIFICATIONS

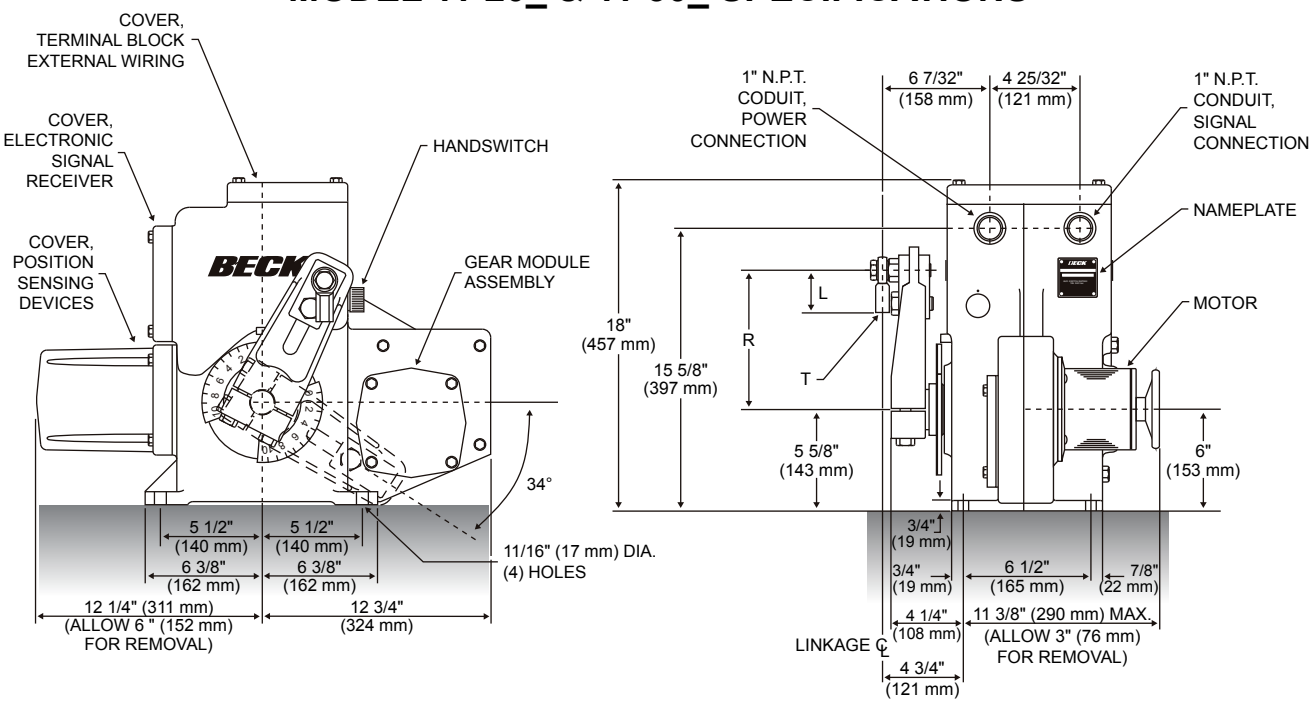


## Crank Arm

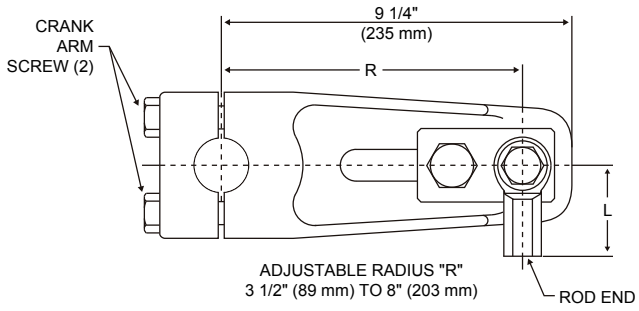


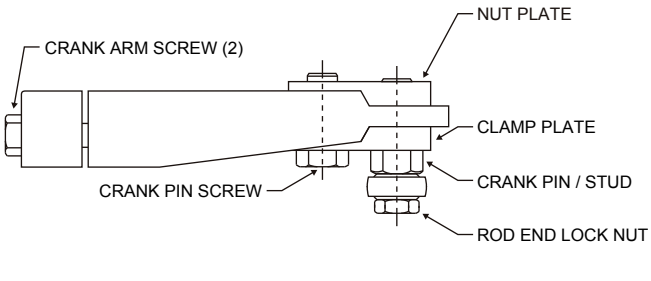


### *Recommended Screw Torques*

| | | | Torque | |
|---|---|---|---|---|
| | Screw Size (in.) | Wrench Size (in.) | lb-ft | N•m |
| Crank Arm Screw | 5/8-18 | 15/16 | 240 | 325 |
| Crank Pin / Stud | 3/4-16 | 1-1/8 | 300 | 407 |
| Crank Pin Screw | 3/4-16 | 1-1/8 | 300 | 407 |
| Rod End Lock Nut | | | | |
| (11-20_) | 1/2-20 | 3/4 | 35 | 47 |
| (11-30_) | 5/8-18 | 15/16 | 65 | 88 |
| Body Screw | 3/8-16 | 9/16 | 20 | 27 |
| Body Screw | 1/2-13 | 3/4 | 50 | 68 |
| Cover Screw | 5/16-18 | 1/2 | 10 | 14 |
| Motor Screw (Hex Wrench) | 1/4-20 | 3/16 | 6 | 8 |
| Gear Module Screw | 5/16-18 | 1/2 | 10 | 14 |

### Model 11-20_ / 11-30_ Crank Arm Part Numbers & Model Information

| | 11-20_ | 11-30_ |
|---|---|---|
| Crank Arm Assembly | 14-7330-40 | 14-8010-34 |
| Crank Arm | 14-8008-05 | 14-8008-01 |
| Crank Arm Screw (2) | 30-0308-75 | 30-0308-75 |
| Clamp Plate | 14-9883-01 | 14-9883-01 |
| Crank Pin / Stud | 14-9920-06 | 14-9920-07 |
| Crank Pin Screw | 30-0308-61 | 30-0308-61 |
| Nut Plate | 14-9883-02 | 14-9883-02 |
| Rod End Lock Nut | 30-0309-19 | 30-0309-23 |
| Rod End | 12-2840-02 | 12-2840-03 |
| Dim. "L" (Length) | 2 1/8" (54 mm) | 2 1/2" (64 mm) |
| Dim. "T" (Thread) | 1/2-20 x 1-3/16" (30 mm) | 5/8-18 x 1-1/2" (38 mm) |
| Output Shaft Diameter | 1 1/2" (38 mm) | 1 3/4" (44 mm) |
| Approximate Weight | 120 lbs (54 kgs) | 125 lbs (57 kgs) |
| Max. Overhung Load | 3,000 lbs (1,361 kgs) | 4,500 lbs (2,041 kgs) |

# MODEL 11-26_ & 11-36_ SPECIFICATIONS

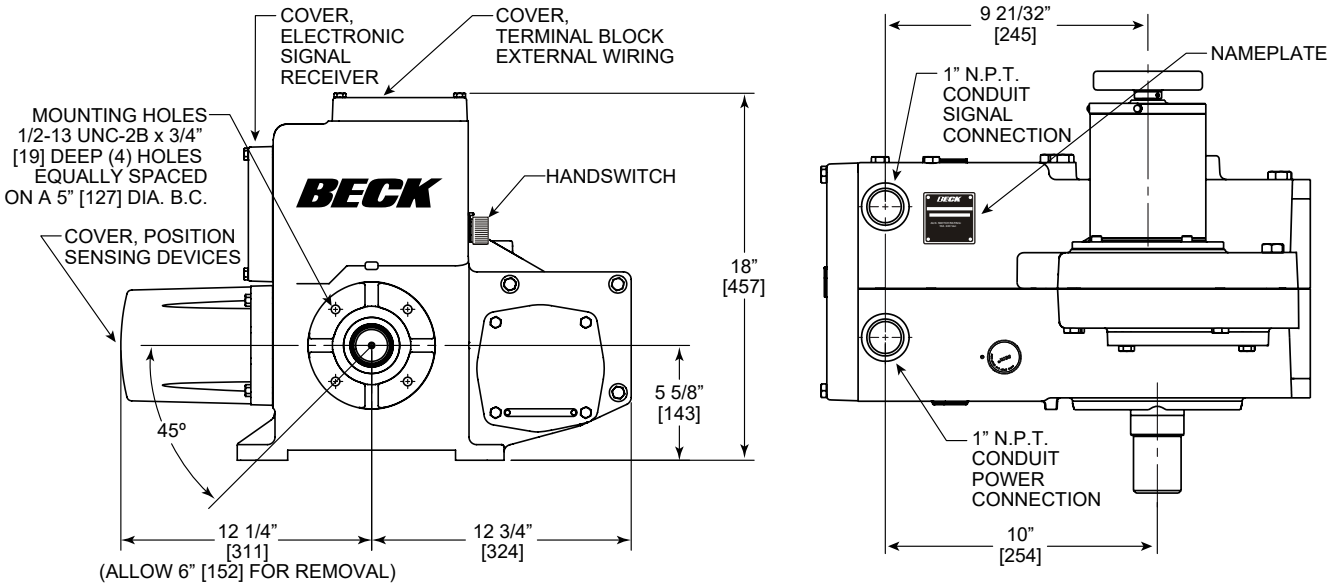


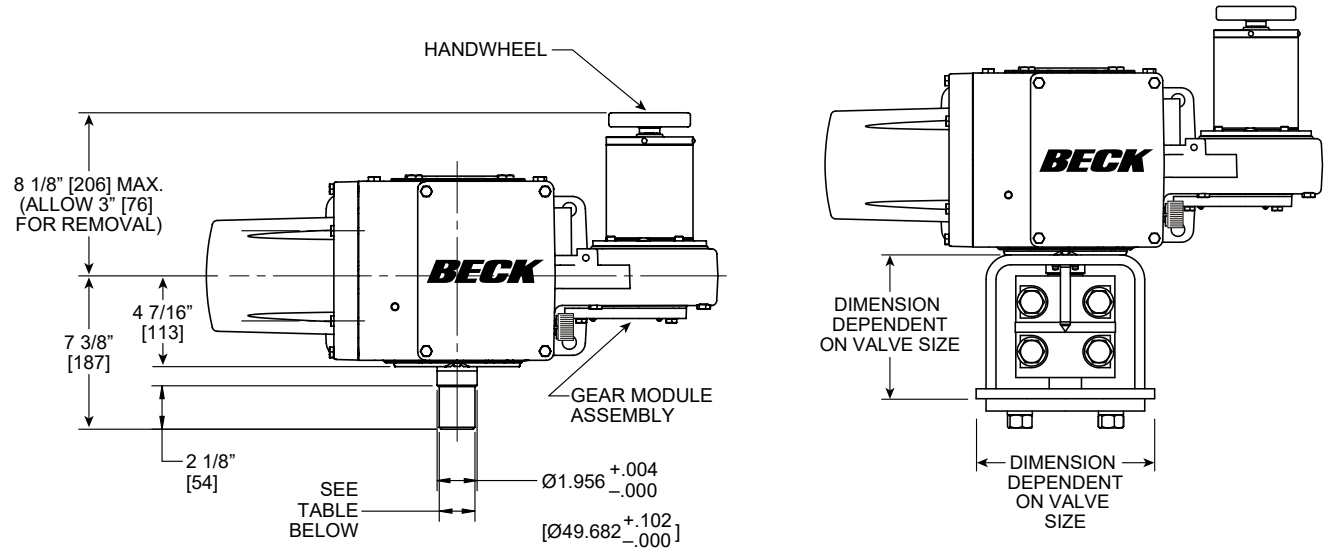


## *Model Information*

| *Model No.* | *Torque Range* | *Approx. Weight* | *Maximum Overhung Load* | *Output Shaft Diameter* |
|---|---|---|---|---|
| 11-260 | 125–250 (lb-ft) | 120 lbs. | 3,000 lbs. | 1.500 in. (+.001/-.000) |
| | 169–339 (N•m) | 54 kgs. | 1361 kgs. | 38.100 mm. (+.025/-.000) |
| 11-360 | 300–650 (lb-ft) | 120 lbs. | 4,500 lbs. | 1.750 in. (+.001/-.000) |
| | 407–881 (N•m) | 54 kgs. | 2041 kgs. | 44.450 mm. (+.025/-.000) |

## *Recommended Screw Torques*

| | *Screw Size (in.)* | *Wrench Size (in.)* | *Torque* | |
|---|---|---|---|---|
| | | | *lb-ft* | *N•m* |
| Coupling Screw | 5/8-18 | 15/16 | * | * |
| Mounting Bracket Screw (Flat Head) | 1/2-13 | - | 50 | 68 |
| Body Screw | 1/2-13 | 3/4 | 50 | 68 |
| Body Screw | 3/8-16 | 9/16 | 20 | 27 |
| Cover Screw | 5/16-18 | 1/2 | 10 | 14 |
| Motor Screw (Hex Wrench) | 1/4-20 | 3/16 | 6 | 8 |
| Gear Module Screw | 5/16-18 | 1/2 | 10 | 14 |

*Varies per application. Refer to the valve mounting specification sheet shipped with your actuator.

# OUTLINE DIMENSION DRAWINGS

## MODEL 11-40_ SPECIFICATIONS

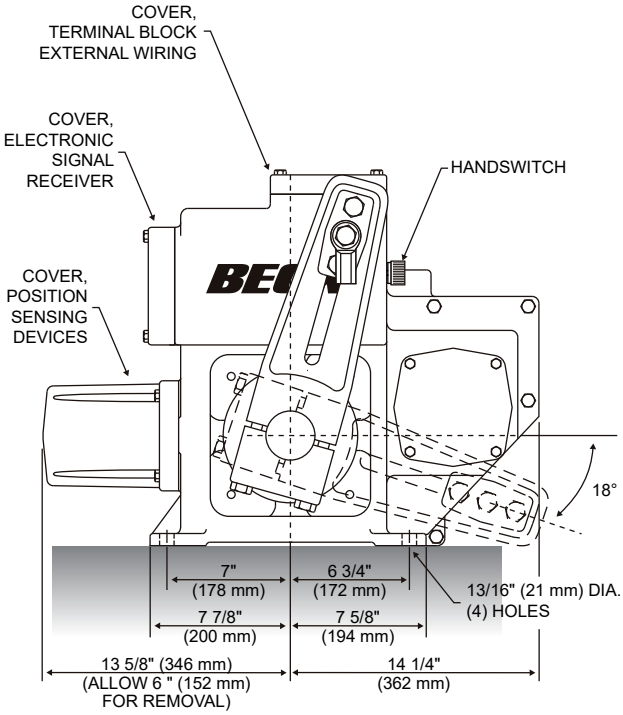


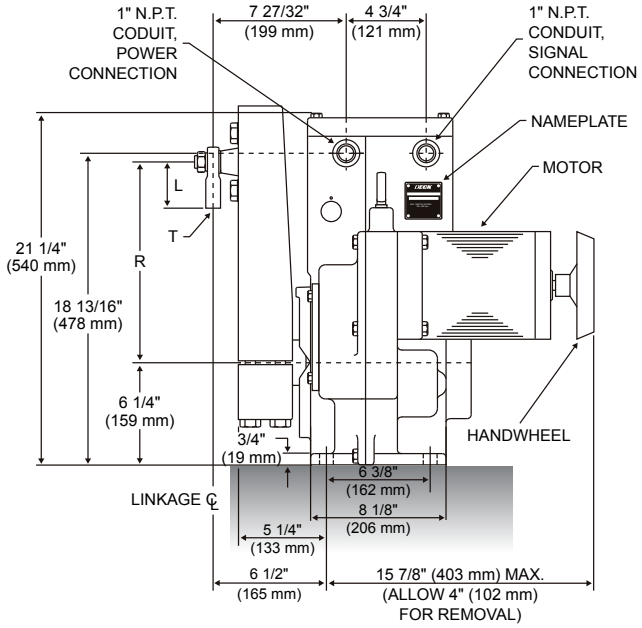


## Crank Arm

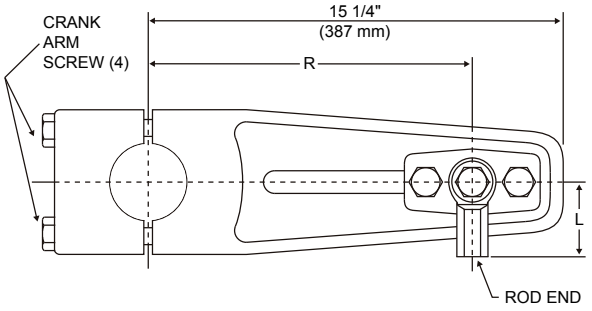


ADJUSTABLE RADIUS "R" 6" (152 mm) TO 12" (305 mm)

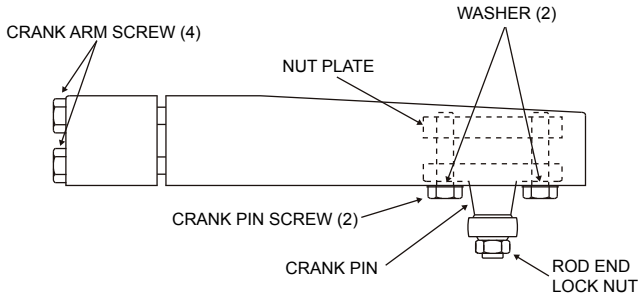


### *Recommended Screw Torques*

| | *Screw Size (in.)* | *Wrench Size (in.)* | *Torque* | |
|---|---|---|---|---|
| | | | *lb-ft* | *N•m* |
| Crank Arm Screw | 5/8-18 | 15/16 | 170 | 230 |
| Crank Pin Screw | 3/4-16 | 1-1/8 | 300 | 407 |
| Rod End Lock Nut | 3/4-16 | 1-1/8 | 120 | 163 |
| Body Screw | 3/8-16 | 9/16 | 20 | 27 |
| Body Screw | 1/2-13 | 3/4 | 50 | 68 |
| Cover Screw | 5/16-18 | 1/2 | 10 | 14 |
| Motor Screw | 3/8-16 | 9/16 | 16 | 22 |
| Gear Module Screws | 5/16-18 | 1/2 | 10 | 14 |

### Model 11-40_ Crank Arm Part Numbers & Model Information

| | *11-409* |
|---|---|
| Crank Arm Assembly | 14-8018-02 |
| Crank Arm | 14-8018-01 |
| Crank Arm Screw (4) | 30-0328-43 |
| Washer (2) | 30-0313-27 |
| Crank Pin | 14-9882-01 |
| Crank Pin Nut Plate | 20-2641-01 |
| Crank Pin Screw (2) | 30-0308-03 |
| Rod End Lock Nut | 30-0309-24 |
| Rod End | 12-2840-04 |
| Dim. "L" (Length) | 2 7/8" (73 mm) |
| Dim. "T" (Thread) | 3/4-16 x 1-3/4" (44 mm) |
| Output Shaft Diameter | 2 3/4" (70 mm) |
| Approximate Weight | 270 lbs (122 kgs) |
| Max. Overhung Load | 9,000 lbs (4 082 kgs) |

# MODEL 11-46_ SPECIFICATIONS

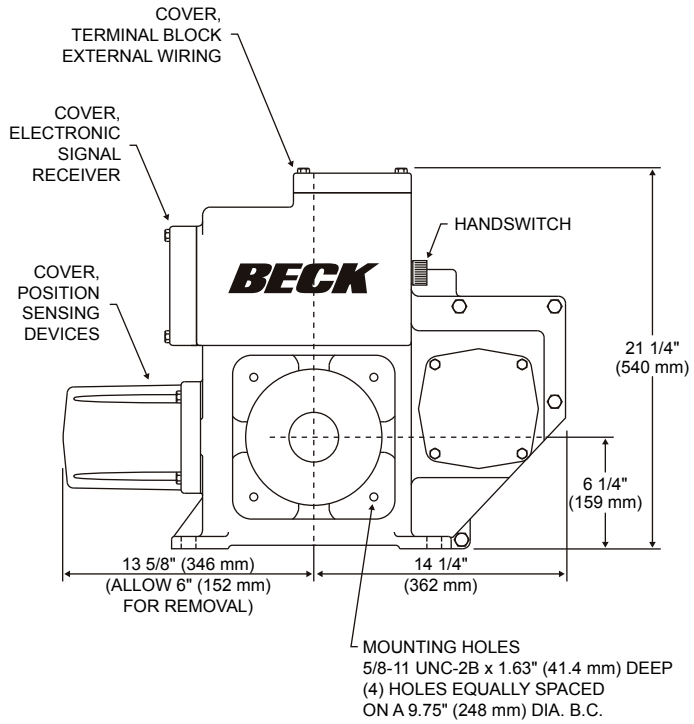


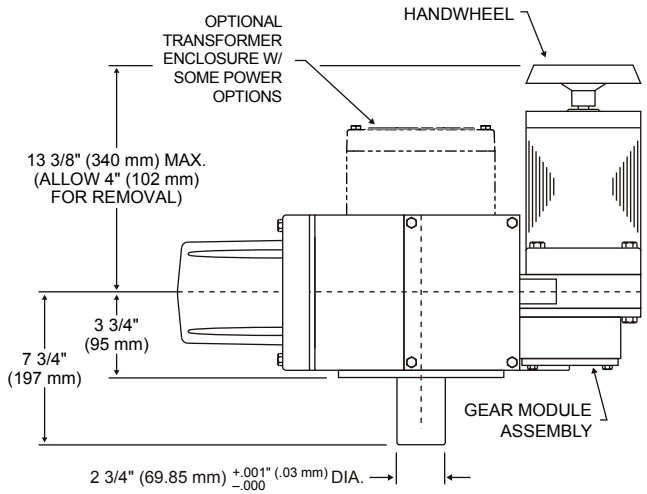


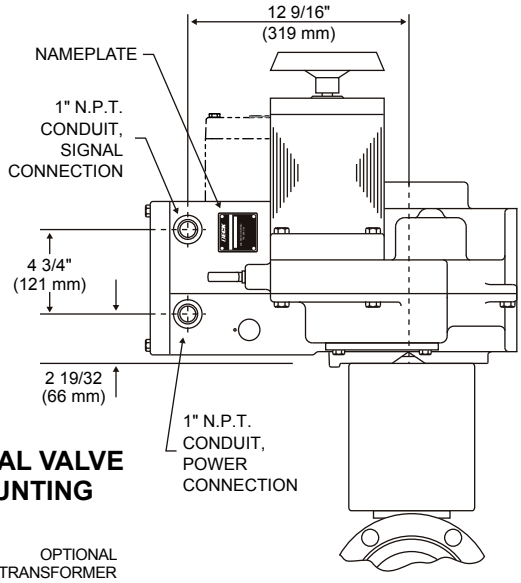


**TYPICAL VALVE MOUNTING**

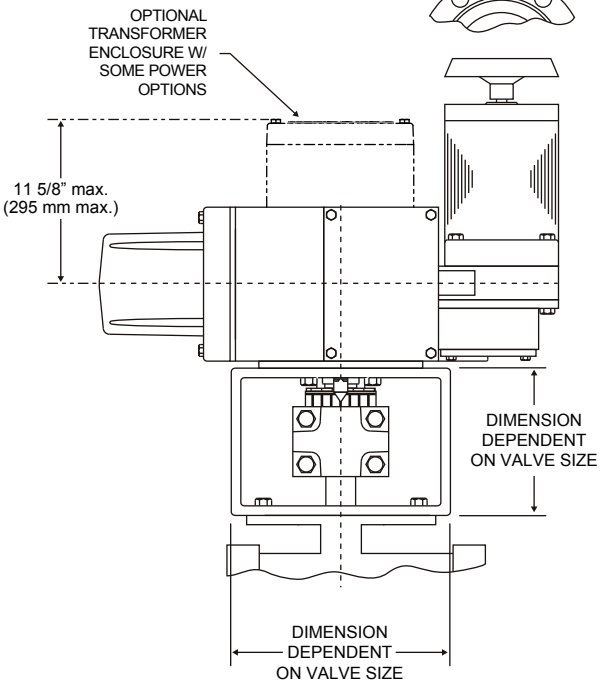


## *Model Information*

| | |
|---|---|
| Approximate Weight | 216 lbs. (98 kg) |
| Maximum Overhung Load | 9,000 lbs. (4 082 kg) |

## *Recommended Screw Torques*

| | *Screw Size (in.)* | *Wrench Size (in.)* | *Torque* | |
|---|---|---|---|---|
| | | | *lb-ft* | *N•m* |
| Coupling Screw | - | - | * | * |
| Mounting Bracket Screw | 5/8-11 | 15-16 | 100 | 135 |
| Body Screw | 1/2-13 | 3/4 | 50 | 68 |
| Body Screw | 3/8-16 | 9/16 | 20 | 27 |
| Cover Screw | 5/16-18 | 1/2 | 10 | 14 |
| Motor Screw | 3/8-16 | 9/16 | 16 | 22 |
| Gear Module Screw | 5/16-18 | 1/2 | 10 | 14 |

*Varies per application. Refer to valve mounting specification sheet shipped with your actuator.

# SUMMARY OF CONTROL OPTIONS

| MODEL NO. | CONTROL TYPE | INPUT SIGNAL | ESR-5 PART NO.* | FEEDBACK DEVICE | EXTERNAL OUTPUT SIGNAL | CPS-5 PART NO.* | AUXILIARY SWITCH OPTIONS |
|---|---|---|---|---|---|---|---|
| 11-__8 | Electronic Modulating | 0–5 or 1–5 mA | 13-2246-02 | CPS-5 Contactless Position Sensor | 4–20 mA | 20-4400-12 | None, 2, 4, 2+INTLOS |
| | | | | | 1–5 V dc | 20-4400-13 | |
| | | | | | 16 V dc or 50 mA max. | 20-4400-13 | |
| | | 4–20 mA | 13-2246-03 | | | | |
| | | 10–50 mA | 13-2246-04 | | | | |
| 11-__7 | Electronic Modulating | 0–10 V dc | 13-2246-07 | 1000 ohm Potentiometer 20-3060-03 | None, 1000 ohm Aux. Pot. | n/a | None, 2, 4, 2+INTLOS |
| | | 1–5 V dc | 13-2246-05 | | | | |
| | | -10–10 V dc | 13-2246-08 | | | | |
| 11-__6 | Direct AC Control (Modulating) | 120 V ac | None | CPS-5 Contactless Position Sensor | 4–20 mA | 20-4400-02 | None, 2, 4 |
| | | | | | 1–5 V dc | 20-4400-03 | |
| | | Low Power 120 V ac | 13-2246-50 (Relay Board) | | 16 V dc or 50 mA max. | 20-4400-03 | |
| | | Low Power dc | 13-2246-51 (Relay Board) | | | | |
| 11-__5 | Direct AC Control (Modulating) | 120 V ac | None | 1000 ohm Potentiometer 20-3060-03 | 1000 ohm Pot. | n/a | None, 2, 4 |
| | | Low Power 120 V ac | 13-2246-50 (Relay Board) | | | | |
| | | Low Power dc | 13-2246-51 (Relay Board) | | | | |
| 11-__4 | 5 Position | 120 V ac | n/a | None | None | n/a | None |
| | 4 Position | | | | | | |
| | 3 Position | | | | | | None, 2 |
| 11-__3 | 2 Position Open/Close | 120 V ac | n/a | None | None | n/a | None, 2, 4 |

***ESR-5 series 13-2246-XX boards replace 13-2245-XX series boards, except for the Relay Boards, as noted.**
**CPS-5 series 20-4400-XX boards replace 20-3400-XX series boards.**

# PRECAUTIONARY INFORMATION

## SAFETY PRECAUTIONS

**WARNING**

**Installation and service instructions are for use by qualified personnel only. To avoid injury and electric shock, do not perform any servicing other than that contained in this manual. Please read and understand the appropriate sections in this manual before attempting to install or operate your actuator.**

## STORAGE INFORMATION

Beck actuators should be stored in a clean, dry area where the temperature is between -40° and 85°C (-40° to 185°F).

Damage due to moisture while in storage is not covered by warranty.

## INSTALLATION—MECHANICAL

There are many considerations regarding proper mechanical installation—see the instructions beginning on page 15 for details. Refer to the outline dimension drawings for physical dimensions and required clearances.

## VALVE ACTUATOR INSTALLATIONS

**CAUTION**

**Working with valves installed in a pipeline can be dangerous. Take appropriate precautions when mounting to installed valves.**

## INSTALLATION—ELECTRICAL

See the instructions beginning on page 18 for details regarding electrical installation.

**CAUTION**

**For maximum safety, the Beck actuator body should be grounded. Use the green grounding screw in the wiring compartment of the actuator.**

**CAUTION**

**Always close covers immediately after installation or service to prevent moisture or other foreign matter from entering the actuator.**

## CONDUIT ENTRIES

Conduit entries are provided for power and signal wiring. Temporary plugs are installed in the conduit entrances at the factory for shipping only and are not intended for permanent use. Prior to actuator operation, all conduit entrances must be properly sealed in accordance with National Standards or Regulatory Authorities.

# COMPONENT LOCATION

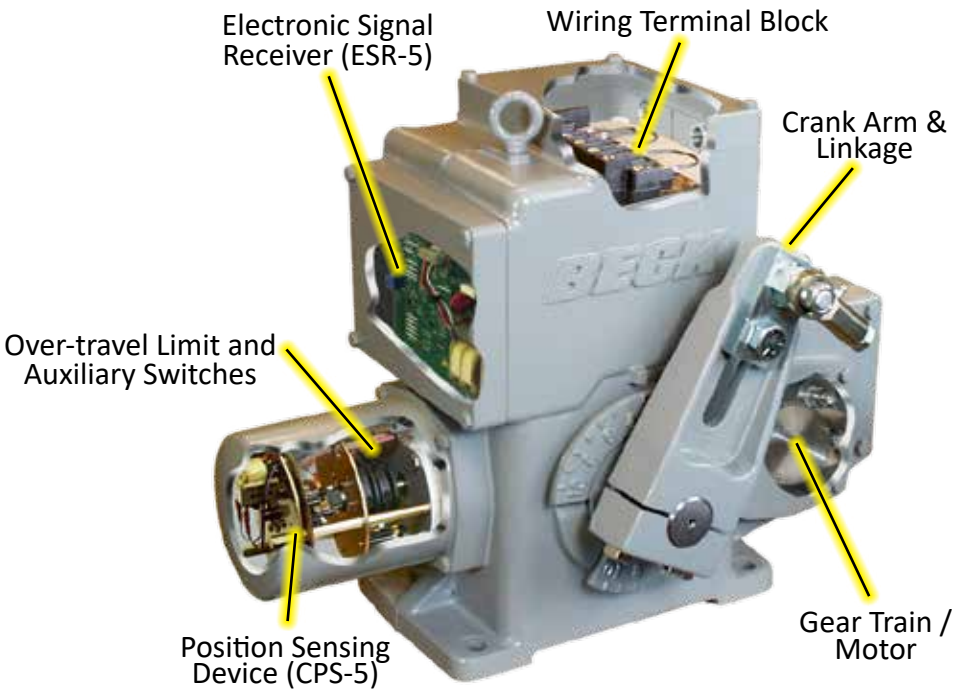


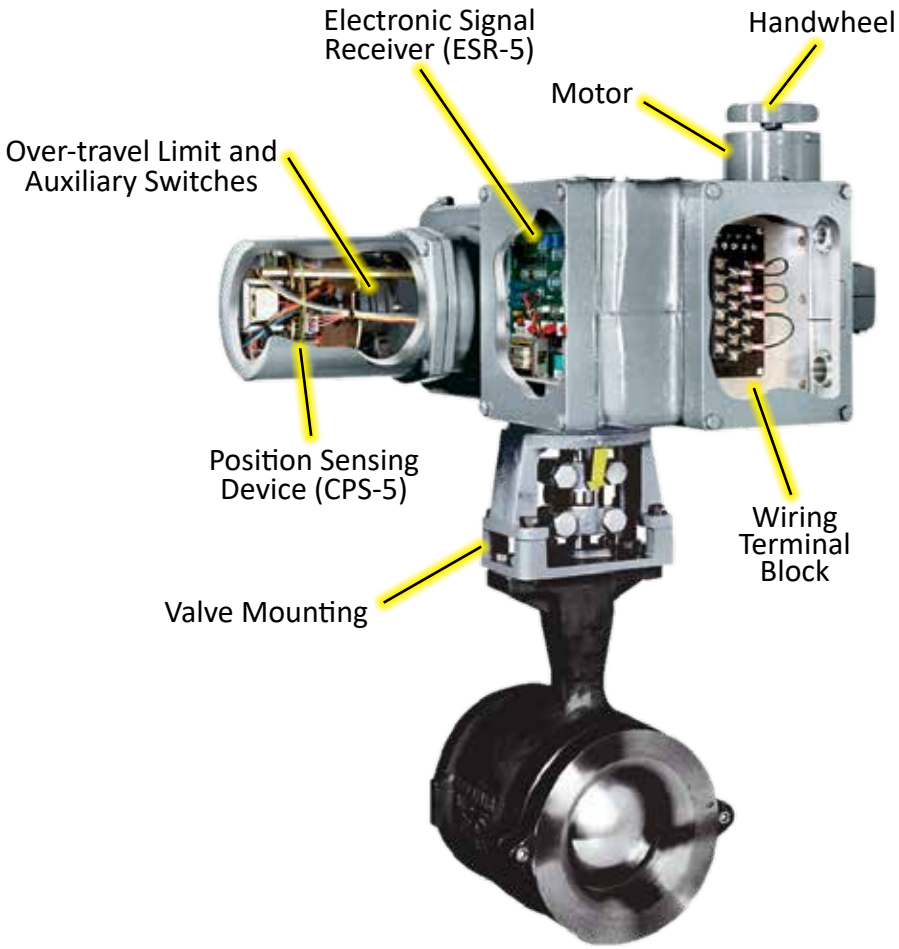


***MODEL GROUP 11 COMPONENTS***

## INSTALLATION—MECHANICAL

Beck Group 11 actuators may be installed in any convenient orientation, because the gearing does not require an oil bath. Refer to the outline dimension drawings for physical dimensions and required clearances.

## VALVE ACTUATOR INSTALLATIONS

**CAUTION**

**Working with valves installed in a pipeline can be dangerous. Take appropriate precautions when mounting to installed valves.**

Whenever an actuator is being mounted on a valve, refer to the valve manufacturer's maintenance manual for specific valve-related instructions. Consult the Beck Valve Mounting Specification sheet shipped with the actuator for specific instructions on assembly of the Beck actuator and mounting hardware to the valve. It is good practice to remove the valve from service if possible.

## UNITIZED VALVE/ACTUATOR ASSEMBLY INSTALLATION

Inspect the valve and pipe flanges to ensure they are clean. Be certain that other pipelines in the area are free from pipe scale or welding slag that could damage the gasket surfaces.

Carefully lift the assembly and position the valve in the pipeline. Install and tighten the flange bolts according to the valve and/or gasket manufacturer's instructions.

**NOTE: The valve may have undergone temperature variations in shipment. This could result in seepage past the stem seals. Refer to the valve manufacturer's maintenance instructions for packing adjustments, if required.**

## FOOT MOUNTED ACTUATOR INSTALLATIONS

Actuators may be mounted in any orientation. If mounting near obstructions such as pipes or beams, take into consideration access to the field wiring terminals, enclosure cover clearances, and the output shaft. Refer to the outline dimension drawings for the clearance necessary to remove covers.

Before the actuator is bolted into place, the mounting surface must be shimmed for flatness to within 0.020 inches. Each shim must support at least 75% of the mounting foot surface area (recommended shim size is 4 square inches or larger). Improper shimming or mounting can damage the actuator mounting feet.

If the actuator is to be bolted to a mounting plate, the plate must be rigid and must not yield to the stresses created from operating the actuator. If the mounting plate is not rigid or the mounting bolts are not sufficiently tightened, damage to the actuator housing could result. A rigid, vibration-free surface will generally prolong the life of the actuator's components. The mounting plate should be at least as thick as the diameter of the mounting bolts.

Mounting bolts should be hex head steel, zinc plated (HHSZP) Grade 2 or better and sized as shown in the table below. The bolts should be torqued appropriately for the application.

| Actuator Model | Bolt Size | Bolt Torque |
|---|---|---|
| 11-15_ | 3/8" | 20 lb-ft (27 N•m) |
| 11-20_ / 11-30_ | 5/8" | 100 lb-ft (135 N•m) |
| 11-40_ | 3/4" | 175 lb-ft (237 N•m) |

## MOUNTING PEDESTALS

Standard and custom retrofit Beck pedestals are available, including designs for a number of common pneumatic actuators such as the Bailey AC and UP series and Hagan cylinders. A typical generic pedestal is shown here.

## LINKAGE REQUIREMENTS

**(IF APPLICABLE)**

For best results, the linkage should be designed in advance. In most applications, the best control will result when the linkage is adjusted so that the full 100° travel of the Beck actuator shaft is used, even though the driven lever may travel less than 100°. The general requirements for a good linkage are:

1. It must be rigid enough to carry the link thrust without bending or deforming.
2. It must have a built-in means of adjustment so that the length of the connecting link can be changed a small amount.
3. Rod end bearings, similar to those furnished on the Beck crank arm, should be used at both ends of the connecting link. This type of device permits small angular misalignments and helps prevent binding of the linkage.
4. The Beck crank arm radius must be calculated so that the arm will move through a 100° arc and the driven lever will move through its correct arc.
5. The actuator and driven shafts must be parallel and the linkage should be in a plane perpendicular to the shafts. See the example of a parallel linkage arrangement at right. Z-Linkage arrangements (where linkage ends are on opposite sides of the parallel between the driven shaft and actuator output shaft) are ***not*** recommended.

## LINK-ASSIST™ REPORT

The Beck Link-Assist™ computer program optimizes the linkage configuration for the application load. It ensures proper setup and operation of the actuator. Contact your Beck Sales Engineer to take advantage of Beck's Link-Assist™ program. Additional Link-Assist™ information is available on the Beck website: *www.haroldbeck.com*.

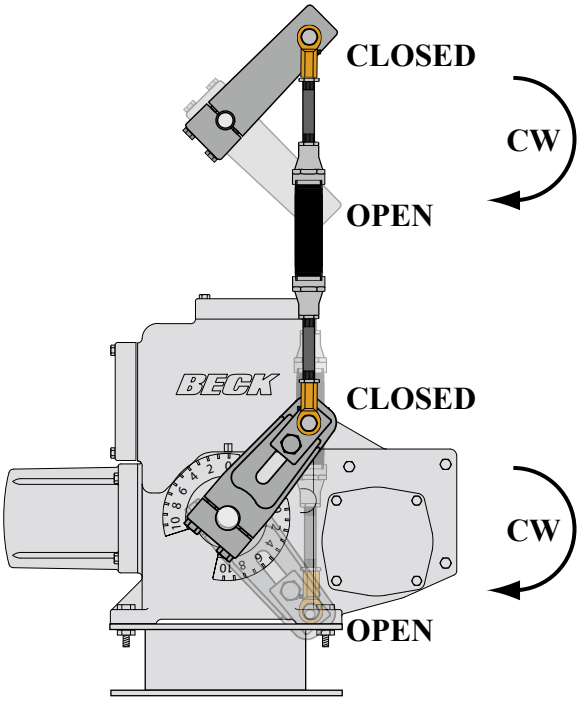


***Parallel Linkage Design Example***
***(Recommended)***

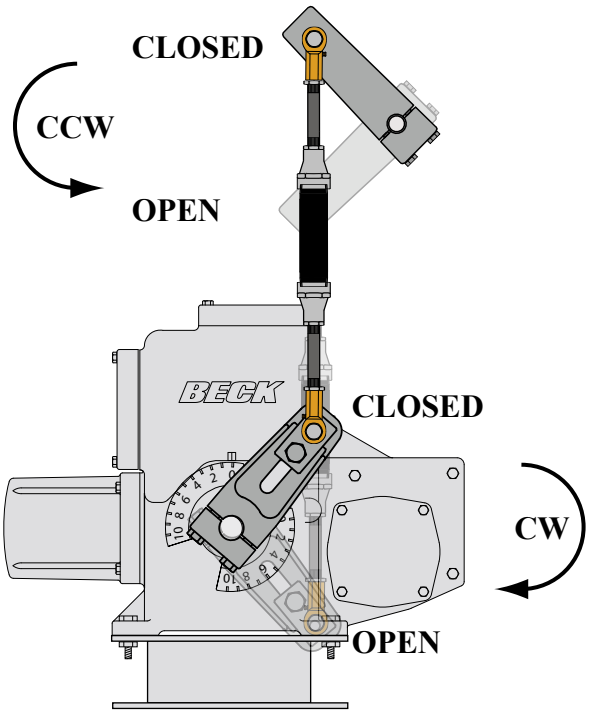


***Z- Linkage Design Example***
***(Not Recommended)***

## LINKAGE KITS AVAILABLE

Beck linkage kits are made to accommodate a wide variation in linkage lengths without requiring modification of end fittings. Linkage kits are also available in stainless steel for use in corrosive environments.

Hex Linkage kits are available for applications with linkage length requirements between 9" (229 mm) and 33" (838 mm). Each hex linkage kit comes complete with a rod end, studs, threaded hex bar, and jam nut hardware.

To order hex linkage kits, first obtain the approximate overall linkage length “A” in the hex linkage figure on page 18. Select the kit part number from the corresponding table. For lengths beyond those listed in the table, contact your Beck sales engineer.

Pipe linkage kits are available for longer linkage length requirements and include the essential linkage end connections, rod end, studs, and jam nut hardware. Schedule 40 pipe is not included and must be cut to length and threaded in the field (see the table on page 18 for instructions to calculate pipe length). To simplify installation of the pipe link, the kit accepts NPT right-hand threads on both ends of the pipe. Left-hand threads are internal to the linkage kit assembly, making final length adjustments quick and easy.

To order pipe linkage kits, first obtain the approximate overall linkage length “A” in the figure on page 18. Select the kit part number from the corresponding table. For lengths beyond those listed in the table, contact your Beck sales engineer.

***Pipe Linkage***

***Hex Linkage***
***(Stainless Steel Option)***

# INSTALLATION Mechanical

## PIPE LINKAGE KITS

| Beck Actuator Model No. | Linkage Length | Linkage Kit Part No. | Stainless Steel Linkage Kit Part No. | Pipe Size | Rod End Thread | Length of 2 Linkage Ends (+/- 1.5" (38 mm)) |
|---|---|---|---|---|---|---|
| 11-15_ | 22-84" (559-2 134 mm) | 20-1730-05 | 20-1730-15 | 1" (25 mm) | 1/2-20 UNF | 20 1/2" (521 mm) |
| | 31-120" (787-3 048 mm) | 20-1740-06 | 20-1740-16 | 1.5" (38 mm) | | 29 1/4" (743 mm) |
| 11-20_ | 22-45" (559-1 143 mm) | 20-1730-05 | 20-1730-15 | 1" (25 mm) | 1/2-20 UNF | 20 1/2" (521 mm) |
| | 31-84" (787-2 134 mm) | 20-1740-06 | 20-1740-16 | 1.5" (38 mm) | | 29 1/4" (743 mm) |
| | 33 1/4-120" (845-3 048 mm) | 20-1750-05 | 20-1750-15 | 2" (51 mm) | | 31 1/4" (794 mm) |
| | 37-120" (940-3 048 mm) | 20-1760-05 | 20-1760-16 | 2.5" (64 mm) | | 34 1/2" (876 mm) |
| 11-30_ | 22 1/2-36" (572-914 mm) | 20-1730-06 | 20-1730-16 | 1" (25 mm) | 5/8-18 UNF | 21" (533 mm) |
| | 31 1/2-72" (800-1 829 mm) | 20-1740-07 | 20-1740-17 | 1.5" (38 mm) | | 29 3/4" (756 mm) |
| | 33 3/4-96" (857-1 219 mm) | 20-1750-06 | 20-1750-16 | 2" (51 mm) | | 31 3/4" (806 mm) |
| | 37 1/2-120" (953-3 048 mm) | 20-1760-06 | 20-1760-16 | 2.5" (64 mm) | | 35" (889 mm) |
| 11-40_ | 23 1/4-34" (590-864 mm) | 20-1730-07 | 20-1730-17 | 1" (25 mm) | 3/4-16 UNF | 21 3/4" (552 mm) |
| | 32 1/4-48" (819-1 219 mm) | 20-1740-08 | 20-1740-18 | 1.5" (38 mm) | | 30 1/2" (775 mm) |
| | 34 1/2-72" (876-1 829 mm) | 20-1750-07 | 20-1750-17 | 2" (51 mm) | | 32 1/2" (826 mm) |
| | 38 1/4-120" (972-3 048 mm) | 20-1760-07 | 20-1760-17 | 2.5" (64 mm) | | 35 3/4" (908 mm) |

*NOTE: To calculate length of pipe required, subtract "Length of 2 Linkage Ends" (shown in table above) from Linkage Length "A" (shown in diagram below).

### *Pipe Linkage*

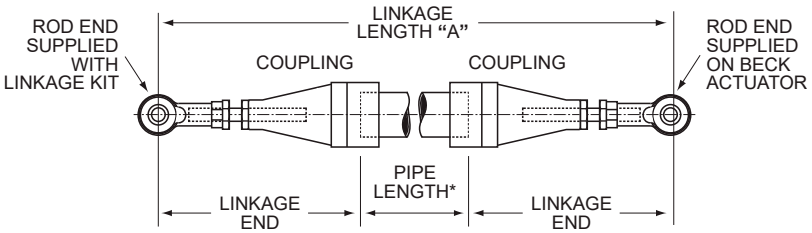


## HEX LINKAGE KITS

| Beck Actuator Model No. | Linkage Length | Linkage Kit Part No. | Stainless Steel Linkage Kit Part No. | Hex Size | Rod End Thread |
|---|---|---|---|---|---|
| 11-15_ | 9-11.5" (229-292 mm) | 14-8300-22 | 14-8300-64 | 5/8" [15.88] | 1/2-20 UNF |
| | 10.5-14.5" (269-371 mm) | 14-8300-32 | 14-8300-72 | | |
| | 14.5-18.5" (368-470 mm) | 14-8300-04 | 14-8300-48 | | |
| | 18-22" (457-559 mm) | 14-8300-06 | 14-8300-50 | | |
| | 22-26" (559-660 mm) | 14-8300-16 | 14-8300-58 | | |
| 11-20_ | 9-11.5" (229-292 mm) | 14-8300-22 | 14-8300-64 | 5/8" [15.88] | 1/2-20 UNF |
| | 10.5-14.5" (269-371 mm) | 14-8300-32 | 14-8300-72 | | |
| | 14.5-18.5" (368-470 mm) | 14-8300-04 | 14-8300-48 | | |
| | 18-22" (457-559 mm) | 14-8300-06 | 14-8300-50 | | |
| | 22-26" (559-660 mm) | 14-8300-16 | 14-8300-58 | | |
| 11-30_ | 13.5-18" (343-457 mm) | 14-8860-24 | 14-8860-62 | 1" [25.40] | 5/8-18 UNF |
| | 17.5-22" (445-559 mm) | 14-8860-08 | 14-8860-48 | | |
| | 22-26.5" (559-673 mm) | 14-8860-02 | 14-8860-42 | | |
| | 26.5-31" (673-787 mm) | 14-8860-04 | 14-8860-44 | | |
| 11-40_ | 13.5-17.5" (343-445 mm) | 15-0110-26 | 15-0110-68 | 1" [25.40] | 3/4-16 UNF |
| | 18-22" (457-559 mm) | 15-0110-20 | 15-0110-62 | | |
| | 22-26" (559-660 mm) | 15-0110-03 | 15-0110-46 | | |
| | 26-30" (660-762 mm) | 15-0110-22 | 15-0110-64 | | |
| | 29-33" (737-838 mm) | 15-0110-02 | 15-0110-44 | | |

### *Hex Linkage*

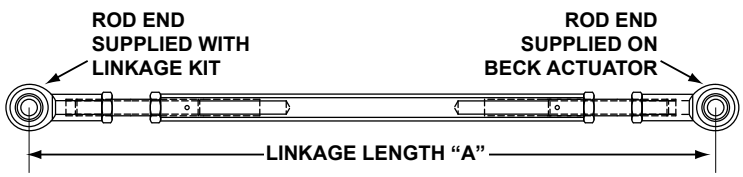

# LINKAGE INSTALLATION

The following procedure is recommended to couple the linkage between the Group 11 actuator and the driven shaft:

1. Position the driven shaft ① to the fully closed position.
2. Set the driven shaft lever to its required starting angle ② (predetermined with Link-Assist™).
3. Remove the rod end ③ from the Beck crank arm. Attach to the connecting link.
4. Adjust the connecting link ④ to the predetermined length.
5. Connect the connecting link to the driven lever at the predetermined radius ⑤.
6. Set the crank pin ⑥(or rod end screw on 11-15_, see appropriate outline dimension drawing) on the Beck crank arm to the predetermined radius. This is done by loosening the crank pin screws ⑦ and sliding the crank pin to the predetermined position (none on 11-15_). Tighten the crank pin screws to the appropriate torque.
7. Loosen the crank arm clamping screws ⑧.

**CAUTION**

**The crank arm will pop free, allowing adjustment for 360° around the shaft.**

8. Position the actuator's output shaft ⑨ to its fully closed limit.
9. Swing the crank arm into position and assemble the connecting link to the crank arm crank pin. Tighten the rod end nut ⑥ to the appropriate torque (see table next page).
10. Tighten the crank arm screws ⑧ evenly, in a cross-pattern (if applicable), to the appropriate torque (see outline dimension tables beginning on page 6).
11. Lubricate the rod end bearings.

Carefully move the actuator's output shaft to the fully open (maximum Demand signal) position. Check that no binding occurs between the linkage, crank arm, driven shaft lever, and surrounding obstructions. Also observe that the driven shaft rotates the proper amount. Ensure that the actuator reaches the proper limit and shuts off.

If binding in the linkage occurs due to too much travel of the driven lever, travel can be reduced by shortening the Beck actuator crank arm radius. Return the actuator to the fully closed position. Loosen the crank arm crank pin screws, and the linkage stud-coupling lock nuts. To make fine length adjustments, while rotating the linkage move the crank pin to a shorter radius position.

## *LINKAGE INSTALLATION*

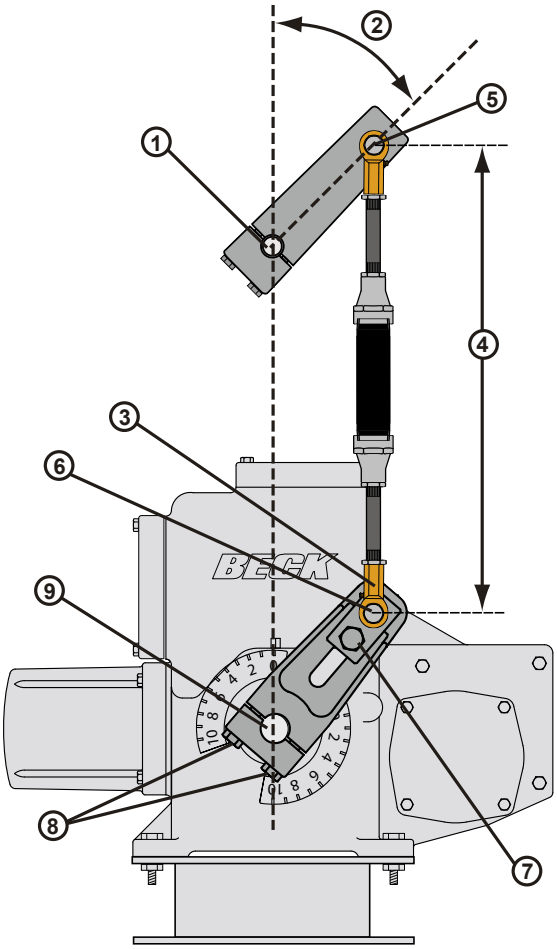


To adjust the linkage length, it is preferable to use the stud couplings. The couplings have right-hand and left-hand threads, so it is not necessary to disconnect the ends to make a length adjustment. Be careful not to expose more than 7" (178 mm) of stud between the rod end and coupling.

**CAUTION**

**The thread engagement depth in the couplings and rod ends must be greater than 1.25 x the thread diameter.**

Tighten crank pin screws and linkage lock nuts, and once again, check operation to confirm that no binding occurs between the linkage and crank arm, driven lever arm, or surrounding obstructions. Further travel adjustments can be made by repeating the above steps.

Tighten all lock nuts and screws to the specified torque value (see outline dimension tables).

Do not change limit switch settings to obtain desired valve or damper travel; this will adversely affect actuator operation.

# INSTALLATION Electrical

## POWER QUALITY

Power quality disturbances such as power outages, transient voltages, harmonic distortions, and electrical noise will adversely affect your actuator performance. Protecting your actuator from these conditions can reduce downtime and promote longer life for the equipment. Following the industry accepted standards below will help protect your actuator.

- Select wiring materials according to the correct ampacity ratings dictated by national and local regulations.
- Shielded, twisted pair cables can be used for signal connections to avoid being affected by electrical noise. These signal wires, based on Noise Susceptibility Level (NSL) per IEEE-518, fall into the level 1 classification. A braided shield will be more effective than a wrapped foil shield. Signal wire shields should be connected to the actuator casting grounding screw. If grounding at the signal source is required, then the shield should not be grounded at the actuator.
- Raceways such as conduits and trays must be grounded at both ends to properly meet immunity requirements.
- An AC power ground connection should be made between the power source and the Beck actuator. Grounding connections including wire and metal conduit are permitted, but the actuator-grounding conductor may not be connected to a structured metal frame of a building.
- Surge suppression equipment that meets Underwriters Laboratory (UL) Standard 1449 may be used to protect against transient voltage conditions.
- Power Conditioners may be used to regulate the supply voltage and maintain a constant voltage level. They are helpful in protection against voltage sags and swells, as well as some measure of electrical noise protection.
- Harmonic filters may be used to minimize the effects of supply voltage waveform distortions and are used in applications that incur a large amount of high-frequency electronic noise.

**CAUTION**

**Always close covers immediately after installation or service to prevent moisture or other foreign matter from entering the actuator.**

## ELECTRICAL INSTALLATION

Two 1" N.P.T. conduit connections are provided for power and signal wiring to the actuator. Conduits should be routed from below the actuator so that condensation and other contaminants flow away from the conduit. All conduit entrances must be properly sealed in accordance with National Standards or Regulatory Authorities.

Power and signal wires should be routed to the actuator separately and be either shielded cables or installed in conductive conduit and/or cable trays.

Refer to the wiring diagram furnished with your Beck actuator for proper AC power and signal connections. The customer must supply 120 V ac to power the actuator (standard configuration). The 120 V ac line connects to terminal C and neutral to terminal B. Other available power options include 208, 240, 380, 415, 480 & 575 V ac.

It is advisable to provide normal short circuit protection on the AC power line. A copy of the wiring diagram is shipped with each actuator and is fastened to the inside of the terminal block cover. If there is no wiring diagram available, you may obtain a copy from Beck by providing the serial number of your actuator.

Connection of a 4-20 mA Demand signal should be made to terminals AA (+) and BB (–).

For maximum safety, the Beck actuator body should be grounded. Use the green grounding screw in the wiring compartment of the actuator.

## TERMINAL SCREW TORQUES

Each terminal screw should be torqued to the proper specification upon landing the wire.

| | | Torque | |
|---|---|---|---|
| ***Models*** | ***Terminals*** | ***(lb-in)*** | ***(N•m)*** |
| **All Models** | A–V | 16 | 1.8 |
| | AA–EE | 12 | 1.4 |
| **11-1__** | FF–KK* | 9 | 1.0 |
| | 1–3* | 9 | 1.0 |
| **11-2__**<br>**11-3__**<br>**11-4__** | FF–SS* | 9 | 1.0 |
| | 1–3* | 20 | 2.3 |

* Terminals included only with certain optional features.

# INSTALLATION Wiring

The terminal block is located in a separate, gasketed compartment at the top of the actuator. Line voltage connections are made on terminal designations A through V and are oriented at a right angle from the low voltage signaling terminals designated AA through EE.

Actuators equipped with optional transformers to accommodate popular voltages include an additional terminal strip and fuse for power wiring (with the exception of the 240 volt option). See optional transformer wiring connections at right.

Terminal screws will accept standard spade or ring terminals, as well as bare wire. Terminals A through V are size #8, and terminals AA through EE are size #6. Optional transformer terminal screws (designated 1, 2, & 3) are size #10 for all models except 11-1__ which are #6. All terminals on all actuators will accept up to #12 AWG (3.31 $mm^2$) with one exception. Actuator models 11-2__, 11-3__ and 11-4__ may use up to #10 AWG wire on the optional transformer terminals (1–3).

Typical wiring connections for each control option are shown below and on the following page. Each actuator can be ordered with up to four optional auxiliary switches (wiring connections are described in the Configuration/Calibration section).

To prevent Handswitch initiated motion, remove jumper (JA) from between terminals A and C.

**CAUTION**

**AC power to the actuator must be turned off before removing the jumper (JA).**

Three additional terminals and fuse (F1) are provided with 3-phase power options.

FUSE (F1) 1 2 3

## Option 8, Modulating

*Analog Position Control with Contactless Position Sensing*

Customer must supply two wires to power the actuator: One 120 V ac line (terminal C), and one neutral (terminal B). Customer must supply two wires for the modulating analog control signal: Connect to terminal AA (+) and to terminal BB(-). Customer may supply two additional wires to monitor the analog position feedback signal (see pages 22 and 23 for connections). The actuator's feedback circuit power supply is derived from the 120 V ac line, so the feedback signal must be wired to a "4-wire" type non-powered analog input.

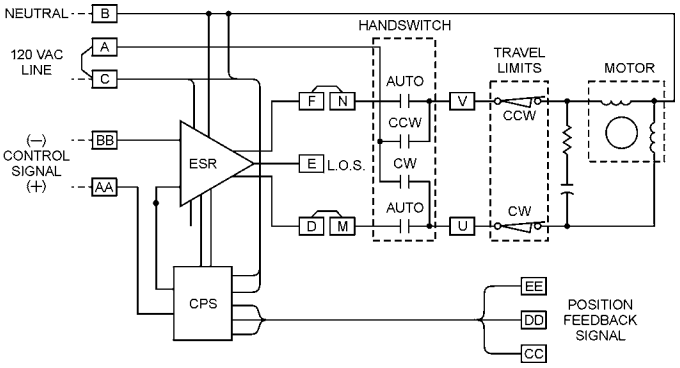


## Option 7, Modulating

*Analog Position Control with Potentiometer Position Sensing*

Customer must supply two wires to power the actuator: One 120 V ac line (terminal C), and one neutral (terminal B). Customer must supply two wires for the modulating analog control signal: Connect to terminal AA (+) and to terminal BB (-). If position feedback monitoring is required, an optional auxiliary potentiometer can be ordered. The optional auxiliary potentiometer connects to terminals CC (reverse), DD (wiper), and EE (forward) and is compatible with standard "slidewire" style inputs.

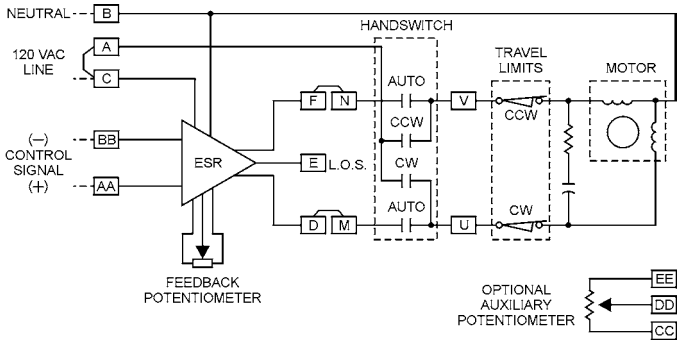

## Option 6, Modulating

*Direct AC Control with Contactless Position Sensing*

Customer must supply three wires to directly control the actuator motor direction: One 120 V ac line to run CW (terminal M), one 120 V ac line to run CCW (terminal N), and one neutral (terminal B). Customer may supply two additional wires to monitor the analog position feedback signal. If position feedback monitoring is desired, a 120 V ac line must be connected to terminal C. The actuator's feedback circuit power supply is derived from this 120 V ac line, therefore the feedback signal must be wired to a "4-wire" type, non-powered analog input.

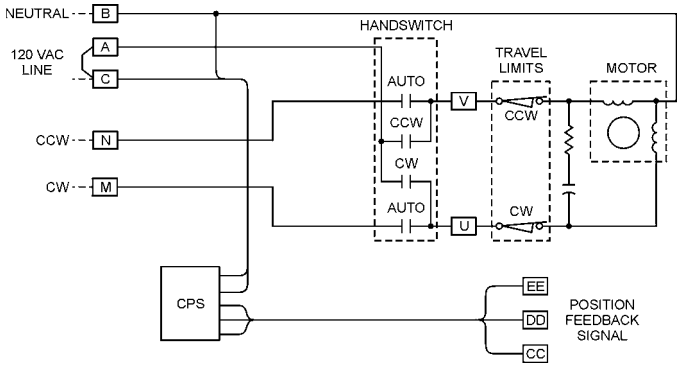


## Option 5, Modulating

*Direct AC Control with Potentiometer Position Sensing*

Customer must supply three wires to directly control the actuator motor direction: One 120 V ac line to run CW (terminal M), one 120 V ac line to run CCW (terminal N), and one neutral (terminal B). The position feedback potentiometer connections are available at terminals CC (reverse), DD (wiper), and EE (forward).

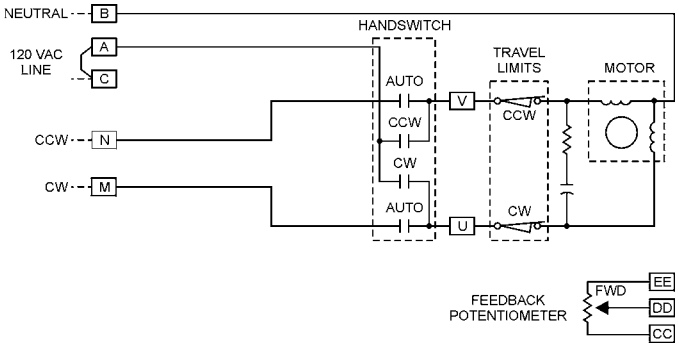


## Option 4, Multi-Position

*Direct AC Control with Cam-Operated Switches to Stop Actuator Travel*

Customer must supply three wires to directly control the actuator motor direction: One 120 V ac line to run CW (terminal M), one 120 V ac line to run CCW (terminal N), and one neutral (terminal B). Up to six intermediate stop positions may be specified, each requiring an additional 120 V ac line.

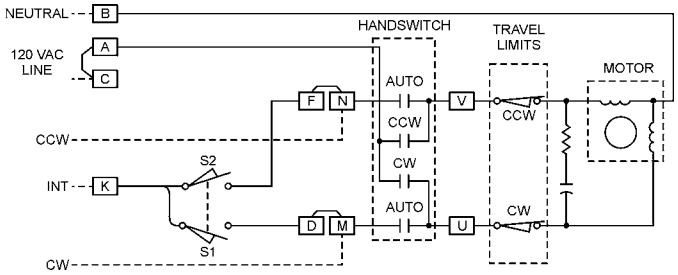


## Option 3, Open / Close

*Direct AC Control*

Customer must supply three wires to directly control the actuator motor direction: One 120 V ac line to run CW (terminal M), one 120 V ac line to run CCW (terminal N), and one neutral (terminal B).

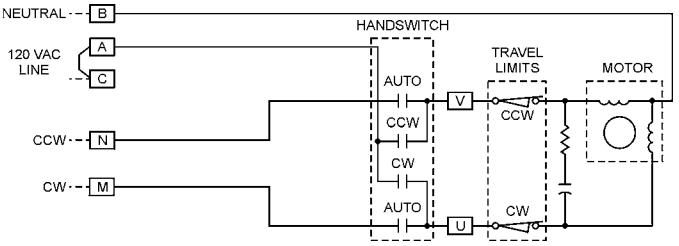

## *POWER CONNECTIONS FOR ALTERNATE POWER OPTIONS*

**Optional Transformer for 380, 415, 480, & 575 Volts**

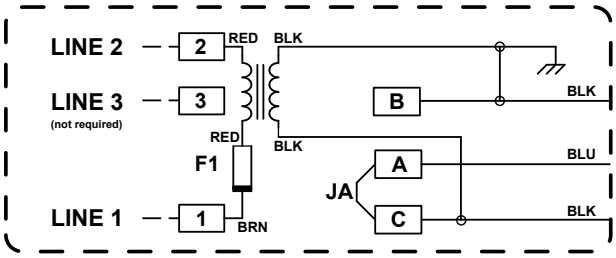


**Optional Transformer for 208 Volts**

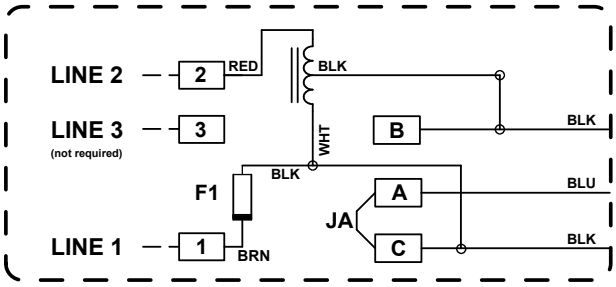


**Optional Transformer for 240 Volts**

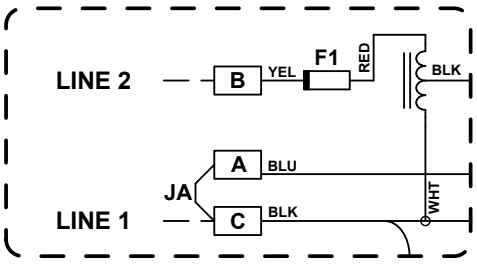


# CPS-5 POSITION FEEDBACK SIGNAL CONNECTIONS

Beck actuators equipped with the Contactless Position Sensor (CPS-5) are shipped ready for installation to match the proper mA or V dc feedback range in your system.

Customer connections for feedback signal wiring on each CPS-5 model are described in the following diagrams and paragraphs. Refer to page 61 for information on output signal ranges, output terminals, range-changing resistance values, and terminals to which the ranging resistor or jumper is connected.

**NOTE: For output shaft rotation of less than 80°, refer to Calibration Procedure, page 35.**

To verify that the feedback signal range is correct for your actuator, see the instructions on page 35.

**NOTE: Ranging resistors must be connected to the actuator output terminals. If ranging resistor change is required, use a resistor with ±1% tolerance. Resistors can be ordered from Beck.**

## CPS-5 Model 20-4400-02, -12 Terminal Connections

1. A single 4–20 mA current output is available between terminals EE (+) and CC (-) when driving into an external load between 250 and 800 ohms. No ranging resistor is required.
2. 4–20 mA output is also available across EE (+) and DD (-); 500 ohms is the maximum external load (for larger loads see Item 1 above).

### 4-20 mA Signal Output

1.

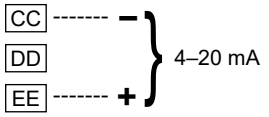


2.

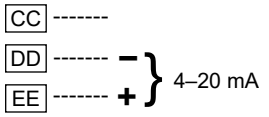

## CPS-5 Model 20-4400-03, -13 Current Feedback Terminal Connections

The universal model has current sensing terminals, which allow for various current signal ranges. Current output is available between terminals DD (+) and CC (-) with the proper ranging resistor connected across terminals DD and EE.

Units are factory-calibrated for specified signal ranges and are provided with proper resistors installed.

The ranging resistor value is given in the table on page 61, or can be calculated using the following equation:

$$R = \frac{4}{(I - .004)}\ \Omega$$

Where R = Resistor (Ohms) Connected from DD to EE
I = Output Current Span (Amp)

If converting to a zero-based range (a range that includes zero as an end point), refer to “Adjusting the zero potentiometer”, page 38.

### Current Output

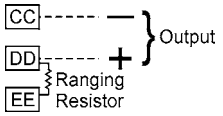


## CPS-5 Model 20-4400-03, -13 Voltage Feedback Terminal Connections

The universal model has a voltage divider network which allows for various voltage signal ranges. Voltage output ranges are available across terminals EE (+) and CC (-) with the proper ranging resistor connected across terminals CC and DD.

Units are factory-calibrated for specified signal ranges and are provided with proper ranging resistors installed. Other voltage ranges are attainable by adding a ranging resistor across terminals CC and DD.

### Voltage Output

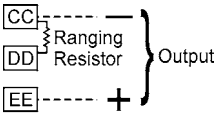


The ranging resistor value is given on page 60, or can be calculated using the equation:

$$R = \left(\frac{V}{4} - 1\right) K\,\Omega$$

Where R = Resistor Connected from CC to DD
V = Output Voltage Span

If converting to a zero-based range (a range that includes zero as an end point), refer to “Adjusting the zero potentiometer”, page 38.

## CPS-5 Model 20-4400-04, -14 Terminal Connections

The three-terminal output from these models is provided for replacing potentiometers in three-terminal potentiometer feedback applications used in many controllers. It is suitable for 0–15 V dc applications of either positive or negative polarity. CC must be connected to the negative lead from the controller, and EE to the positive lead from the controller, with DD connected to the controller lead accepting the feedback from the potentiometer wiper. These models can “source” 10 mA to the controller, or they can “sink” 2.5 mA from the controller.

### Potentiometer Equivalent

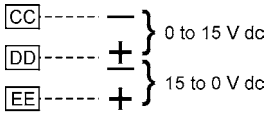


## CPS-5 Model 20-4400-05, -15 Terminal Connections

Voltage signal -10 to +10 V dc is available across terminals EE (+) and DD (-). The maximum load is 5 mA.

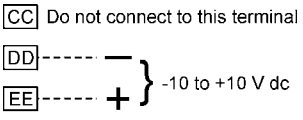

# INPUT SIGNAL OPTIONS

Beck actuators configured for milliamp or DC analog modulating applications include an Electronic Signal Receiver (ESR-5) board. Several control options are available with the ESR-5, such as operating more than one actuator with a single signal source.

The instructions that follow apply to applications which require a signal change or to situations calling for operation of multiple actuators from a common demand Demand signal.

## Input Range Change to ESR-5

If it is necessary to change the Demand signal range, jumpers must be removed (and, in rare cases, a resistor or jumper added) as per the table on page 26. See the figure on page 41 for component locations.

## Series Operation

Beck actuators can be connected in series from the same signal for concurrent operation. Care must be taken to keep the polarity correct in each actuator's input terminals. Two or three actuators may usually be connected in series. The number of actuators that may be connected in series is limited only by the controller's (signal source) capability to feed current into the total resistance of the circuit involved. Consult the controller manufacturer's recommendations.

No change is required to the actuator calibration for series operation. An interruption in the circuit will actuate loss of Demand signal (L.O.S.) on the actuators in the circuit.

## Parallel Operation

Beck actuators can be connected in parallel to the same Demand signal for concurrent operation. Up to four actuators may be connected in parallel.

For parallel operation on a 4–20 mA Demand signal, use ESR-5 board no. 13-2246-05 in each actuator and add a resistor across input terminals AA and BB on one of the Beck actuators. The resistor value* should be as follows:

2 actuators = 261Ω resistor

3 actuators = 270Ω resistor

4 actuators = 280Ω resistor

*Resistor values will vary for other Demand signals, please consult the factory.

Note that a minor span adjustment is required for each actuator in parallel. An interruption in the circuit to one actuator will not prevent the other actuators from functioning, but there will be a slight calibration shift.

## Split Range Operation

Two or three Beck actuators may be operated over their full range by a portion of the controller's output signal range. The most common arrangement involves the parallel operation of two actuators operating on equal halves of the Demand signal range. See the following example:

If a 4–20 mA control signal is used, the first actuator would move 100% of its stroke on a signal range of 4–12 mA, while the second operates on the 12–20 mA portion of the signal. In this case, the ESR-5 boards are the same as would be used for parallel operation (13-2246-05), but calibrated to the range required for each actuator. A resistor must be added across input terminals AA and BB on one of the Beck actuators to produce a span between 2 and 6 volts across each board for its active portion of the range; for this example, use a 487Ω resistor.*

Follow the steps for calibrating the Demand signal, page 38, for each actuator unit, using half span values for the Demand signal. Use the proper starting point for each half-range when setting the zero; 4 mA and 12 mA. Before setting the zero on the second actuator (12 mA), cut R35. See the figure on page 41 for its location on the board.

When three actuators are to be operated on equal portions of the Demand signal, the 4–20 mA range would split into 4–9.33 mA, 9.33–14.67 mA, and 14.67–20 mA signals. A 487Ω resistor* may be used. Proceed as in the case of the 2-way split, first setting the span, then the zero. When setting the ESR-5 board in the first actuator, set the zero at 4 mA. Then, on the second actuator cut R35 and set its zero at 9.33 mA. Before setting zero in the board of the third actuator, short out R34 by adding a jumper, adjust its zero at 14.67 mA, cut resistors R35 & R36, then remove the jumper from R34. Check operation of all actuators by running the Demand signal through its complete range.

In a split range configuration, connect terminals E and F (L.O.S. wire) to prevent undesired "stay-in-place" operation of the second and, if applicable, third actuator due to fast downward signal changes.

*Resistor values will vary for other Demand signals, please consult the factory.

# INSTALLATION Wiring

## ESR-5 MODELS*

| INPUT SIGNAL | ESR-5 PART NO. | CHANGE FROM 13-2246-03 | EFFECTIVE ESR-5 R-IN (Ω) |
|---|---|---|---|
| 1–5 mA | 13-2246-02 | Remove J10 | 1 K |
| 4–20 mA | 13-2246-03 | None | 250 |
| 10–50 mA | 13-2246-04 | Remove J11, add Rin4 (100Ω) | 100 |
| 1–5 Vdc | 13-2246-05 | Remove J9 | 10 K |
| 0–10 Vdc | 13-2246-07 | Remove J1 and J9 | 10 K |
| -10–10 Vdc | 13-2246-08 | Remove J1,J2,J7,J8,J9 and R34 | 50.0 K |

| SPECIAL DEADBANDS MODEL | | | | | |
|---|---|---|---|---|---|
| INPUT SIGNAL | ESR-5 PART NO. | CHANGE FROM 13-2246-03 | | | DEADBAND % |
| | | J3 | R42 (MΩ) | RESISTOR PART NO. | |
| 4–20 mA | 13-2246-99 | REMOVED | 4.99 | 13-2512-12 | 1 |
| | 13-2246-99 | Consult factory for other available options | | | |

| SPECIAL INPUT RANGE MODEL | |
|---|---|
| ESR-5 PART NO. | |
| 13-2246-97 | Consult factory for available options |

| SPECIAL LOS FUNCTIONS MODEL | |
|---|---|
| ESR-5 PART NO. | |
| 13-2246-98 | Consult factory for available options |

* ESR-5 series 13-2246-XX boards replace 13-2245-XX series boards.

**NOTE: All Beck actuators are shipped from the factory ready for installation. Each actuator is set-up and calibrated to the customer's specifications that were written into the equipment order. Electrical adjustments are generally not required before placing the actuator in operation.**

## START-UP INSTRUCTIONS

After the actuator is mounted and its wiring connections are made, it is ready to be tested for proper operation.

Turn on the power supply. Operate the actuator with the Handswitch and run it through its full stroke, both directions. Observe that the driven device travels through its desired stroke. If satisfactory, set Handswitch to the "AUTO" position.

If the actuator is to be operated with automatic control, turn on the controller and operate the actuator by varying the control signal. Check that the damper or valve strokes in the proper direction for a change in control signal. If it does not, first check for proper wiring connections and verify control signal at the actuator. If the wiring is correct, then change the direction of output shaft rotation (see page 33).

If the actuator is to be push-button actuated, (options 3, 4, 5, or 6) operate the actuator using the Handswitch and observe that direction of travel is correct. When travel of the driven device is satisfactory with reference to the control signal or the push-buttons, the unit is ready for operation.

# OPERATION

## HOUSING

Beck electric actuators have individual cast aluminum compartments for each of the five main components: The control motor, wiring terminal block, drive train, electronic signal receiver, and control end. Gasketed covers and sealed shafts make the actuators ideally suited to outdoor and high humidity environments.

Heavy cast mechanical stops built into the housing are designed to prevent accidental over-travel damage during manual cycling, and ensure that proper orientation is maintained between the output shaft and the feedback system.

## CONTROL MOTOR

The Beck control motor is a synchronous inductor motor which operates at a constant speed of 72 RPM or 120 RPM in synchronism with the line frequency.

Motors are able to reach full speed within 25 milliseconds and stop within 20 milliseconds; actual starting and stopping times will vary with load.

Beck motors have double grease-sealed bearings and require no maintenance for the life of the motor.

## GEAR TRAIN

The gear train is a four-stage reduction, spur gear drive constructed with only heat-treated alloy steel and ductile iron gears for durability and long life.

The actuator train consists of the control motor and Handwheel, reduction gears, main gear, output shaft, and crank arm. The main gear / output shaft and third stage gears are common to all units of a particular actuator model. The second and first stage gears are part of the field-interchangeable gear module. Different combinations of gear modules and actuator motors determine the actuator's output torque and timing. See table on page 56 for details.

On standard models, the output shaft is limited by mechanical stops to 108° of rotation (98º on the 11-160). Optional main gear / output shaft assemblies are available that permit multi-revolution output rotation. Mechanical stops are not included on these models.

Mechanical transmission of output shaft position to the control end is provided by a right angle gear set driven directly by the output shaft.

## SELF-LOCKING MECHANISM (SLM)

An integral part of every control motor is the self-locking mechanism. This mechanical device couples the motor to the gear train and transmits full motor torque when rotated in either direction. When the motor is de-energized, the SLM instantaneously locks and holds the output shaft in position.

## HANDWHEEL

Every Beck actuator is furnished with a Handwheel to permit manual operation of the valve or damper without electrical power. Its solid construction design includes no spokes or projections, and turns at a safe, slow speed. The Handwheel is located at the rear of the control motor housing. The Handwheel is coupled directly to the motor shaft and rotates when the motor runs. Manual operation of the Handwheel (with electric Handswitch in "STOP" position) turns the motor and the rest of the actuator train without incorporating a clutch.

## HANDSWITCH

A local electric Handswitch is provided on Beck actuators to permit operation at the valve or damper, independent of the controller. As a safety feature, the Handswitch is designed so that the controller can operate the actuator only when it is in the "AUTO" position. The sequence of the Handswitch is: "AUTO", "STOP", "CW", "STOP", "CCW".

In the "AUTO" position, two contacts are closed and the ESR-5 or external controller contact completes the control circuit.

In the "CW" or "CCW" positions, contacts are closed to operate the actuator independently of the controller.

In the "STOP" position, all contacts remain open.

## SWITCHES

Two over-travel limit switches (control options 5 thru 8) or two end-of-travel limit switches (control options 3 and 4) and up to four optional auxiliary switches are provided on Beck actuators. Switch cams are clamped onto the control shaft which rotates in relation to the output shaft. Cam position is field-adjustable. Switches are rated 6 A, 120 V ac. All auxiliary switch connections are made on the terminal block.

## CONTROL OPTIONS

Two basic types of control are available: 120 V ac contact closure (options 3, 4, 5, and 6) and milliamp or DC analog modulating (options 7 and 8). Each option is described below.

**Open / close option 3:** For simple 2-position control using manual push-buttons or an automatic controller. Preset end-of-travel limit switches provide open / close operation upon closure of an automatic controller or manually operated switch. Travel limits are adjustable over the full range of travel and provide precise positioning repeatability.

**Multi-position option 4:** Adjustable cam operated switches provide up to six discrete stop positions upon closure of an automatic controller or manually operated switch. Three, four, five, and six predetermined position settings are possible, with precise positioning repeatability.

**Direct AC control option 5:** Provides continuous positioning capability over the full range of actuator travel by direct AC control from either an automatic controller or manually operated switches. Includes a 1,000 ohm film potentiometer for remote feedback.

**Direct AC control option 6:** Provides continuous positioning capability over the full range of actuator travel by direct AC control from either an automatic controller or manually operated switches. Includes a Contactless Position Sensor (CPS-5) for feedback and position indication.

**Modulating option 7:** For automatic operation in response to milliamp or dc analog control; includes a film potentiometer for position sensing and feedback to the Electronic Signal Receiver (ESR-5).

**Modulating option 8:** For automatic operation, as in option 7 above; includes Contactless Position Sensor (CPS-5) for position sensing and feedback to the ESR-5.

## INPUT: ELECTRONIC SIGNAL RECEIVER (ESR-5)

Beck modulating actuators are equipped with a precision electronic control module (ESR-5) to receive conventional 4–20 mA or 1–5 V dc control signals directly, eliminating the need for contact protection devices, relays, switches, and reversing starters.

The ESR-5 provides control with either analog or microprocessor control systems, and is designed to operate continuously in temperatures up to 185°F (85°C).

The ESR-5 requires a position feedback signal from either the CPS-5 monitor / isolator board or a film potentiometer. This feedback signal is compared to the Demand signal. A difference in these signals (the error) is amplified and used to actuate either of two electronic motor power switches. These switches drive the motor in the proper direction to force the error to zero. The Demand signal is adjustable from 50% to 400% of the 4-volt span, with the zero adjustable from -100% to +275% of span.

The ESR-5 permits two or more Beck actuators to be operated by a single signal source, for series, parallel, or split range operation. See page 25 for details on these control options.

If the Demand signal to the Beck actuator is changed, the ESR-5 allows for easy modification to accept a different signal current. An optional “Relay board” version of the ESR-5 permits operation on low current 120 V ac with an external diode / resistor module or low voltage DC Demand signals (5 to 24 V dc). This topic is covered on page 42.

## POSITION FEEDBACK: CONTACTLESS POSITION SENSOR (CPS-5)

The CPS-5 provides a continuous feedback signal proportional to the position of the actuator’s output shaft. The position sensing function of the CPS-5 is provided by a ferrite magnetic sensing element. An electronic circuit translates the signal from the ferrite magnetic sensor into an analog position feedback signal designed to interface with electronic control systems and indicating instruments.

When used with the ESR-5, the CPS-5 includes a monitor / isolator board that delivers an isolated position feedback signal to the ESR-5. The Monitor function monitors the CPS-5 position signal and compares it to established limits. If the output exceeds normal signal conditions, the monitor relay contact opens. This relay may be used for either a remote signal indication or activation of Loss-of-Signal operation of the actuator.

## POSITION FEEDBACK: FILM POTENTIOMETER

The film potentiometer produces a voltage that is a fraction of the voltage applied across its resistive element. That voltage fraction is determined by the position of the wiper on the resistive element. The potentiometer assembly also includes two fixed resistors, one on each end of the resistive element. These resistors permit suppressed ranges as well as zero-based position feedback voltages. If position feedback is desired on actuators equipped with an ESR-5 board, two film potentiometers are required: One for position feedback and the second to supply a feedback signal to the ESR-5.

# OPERATION

## LOSS OF SIGNAL (L.O.S.)

Beck actuators equipped with the ESR-5 have the ability to move to a predetermined position upon loss of demand signal. When the demand signal drops to approx. 13% of span below the zero setting, the ESR-5 provides an annunciating signal with one of the following options:

1. STALOS = Stay in place, lock in last position. (Triac output available at terminal E for remote alarm, 0.12 to 5 A, 120 V, 50 or 60 hz)
2. REVLOS = Move to the minimum limit switch position. Connect terminal E to F.
3. FWDLOS = Move to the maximum limit switch position. Connect terminal E to D.
4. INTLOS = Move to predetermined intermediate auxiliary switch position. Consult factory.

When the demand signal is lost but the power remains on, the L.O.S. switch on the ESR-5 board is energized, a red LED on the board lights and the directional switches are turned off. The output of the L.O.S. switch is connected to terminal E which is wired for one of the predetermined operating modes listed above.

When REVLOS, FWDLOS, or INTLOS is selected, an additional relay is required in order to provide the annunciating signal. This should be specified on ordering.

## STALL PROTECTION AND ANNUNCIATION

The Beck Stall Protection Module (SPM) is an optional feature for Group 11 actuators. The SPM monitors the motor current at terminals N and M. The SPM will be activated when the actuator cannot reach a desired position within approximately 300 seconds.

When a stall is sensed, the SPM shuts off power to the motor and a solid state relay in the SPM changes state. The relay is rated for 120 V ac or dc, 10 VA. Two terminals connected to the solid state relay are located on the SPM. Use of the relay for annunciation of a stall is optional and will not affect the other functions of the SPM. A sensed stall condition is cleared by either reversing the motor direction command in the controller or by turning the actuator power off and on. An LED is included on the SPM to show the operating status of the module.

# CALIBRATION

## CALIBRATION PRIORITY

Standard Group 11 actuators are equipped with fixed, non-adjustable, built-in mechanical stops. All output shaft rotation must occur within these stops, which are outside the electrical range of travel.

The over-travel or end-of-travel limit switches are used to limit the electrical control range of the actuator. These switches are cam operated and are set slightly wider apart then the actuator's intended full range of electronic operation for options 5 thru 8—typically 101° (11-15_/-20_/-30_/-40_) or 91° (11-16_/-26_/-36_/-46_). For options 3 & 4, the end-of-travel limit switches are set at the actuator's intended full range of operation—typically 100° (11-15_/-20_/-30_/-40_) or 90° (11-16_/-26_/-36_/-46_).

If the actuator is short-stroked—i.e., the full travel rotation from 0–100% is reduced to less than the standard 100° or 90° rotation—it may be desirable to reset the limit switches (see page 31). If the limit switches are not reset, Handswitch operation of the actuator (CW, CCW) will still result in the original full range of travel. It is best to calibrate the actuator and then set the limit switches when short-stroking the actuator. Over-travel limit switches (options 5 thru 8) should be set just outside the calibrated range to avoid tripping the switch at the 0% and 100% positions.

The auxiliary switches are also cam operated, but have no affect on actuator operation. Therefore, the auxiliary switches can be adjusted at any time without affecting performance or calibration.

# CALIBRATION Switches

**NOTE: Your Beck actuator was shipped from the factory ready for installation; no electrical adjustments are required before placing it in operation. Each actuator is set up and calibrated to the specifications that were written into the equipment order.**

Under normal operating conditions there is no need to recalibrate the actuator. However, if the application requirements change—or are different than specified on the equipment order—the actuator should be recalibrated according to the following procedures.

## SWITCH ADJUSTMENTS

Over-travel limit switches (options 5 thru 8) are factory set 1/2° outside each end of travel unless otherwise specified at time of order. End-of-travel limit switches (options 3 & 4) are factory set at each end of travel unless otherwise specified at time of order. Limit switches must be set inside the range of the built-in mechanical stops to prevent stalling of the motor. Limit switches can be reset to limit travel of the output shaft to any angle down to a minimum of approximately 60°. Auxiliary switches are set as shown in the illustration on page 32 unless otherwise specified at time of order.

**NOTE: The limit switches are the switches closest to the actuator body. To adjust these switches, it is necessary to remove the control end cover.**

Switches are operated by cams which are clamped onto the control shaft. Setting a switch involves loosening the cam, moving the output shaft to the desired position, and positioning the cam so that it just operates the switch at that point. In the following procedure, the use of a continuity meter is recommended to determine when the switch opens or closes. If such a meter is not available, it is possible to hear the switch click as the contacts open and close.

**CAUTION**

**Do not attach the meter or attempt to move the switch cams until the actuator is disconnected from the line voltage and auxiliary switches are disconnected from external power sources.**

## SETTING LIMIT SWITCHES CW AND CCW

This procedure should be used if the factory limit switch settings must be changed in the field. It is advisable to operate the actuator fully in each direction, using the electric Handswitch to check switch settings before attempting to change them. Follow these instructions if they require adjustment:

**NOTE: The rotation direction of the output shaft is the same as the control shaft except for models 11-1__, in which the shafts rotate in opposite directions.**

1. Remove the control end cover (and extensions, if applicable) and terminal block cover (1/2" wrench).
2. Use the electric Handswitch to drive the control shaft so that the CW switch cam screw is accessible. Using a 7/64" hex wrench, loosen the screw so that the cam is just snug on the shaft (see photo, page 32).
3. Move the output shaft to the desired CW limit (for options 5 thru 8, this should be just outside the desired fully CW position).
4. Turn the Handswitch to the "STOP" position.
5. ***Disconnect power from the actuator.***
6. Connect a continuity meter across terminals B and U. Rotate the cam until the meter shows no continuity (switch contacts open, switch clicks).
7. Tighten the cam locking screw to 5 lb-in (0.56 N•m) torque.
8. Disconnect meter and ensure the Handswitch is in the "STOP" position.
9. Reconnect actuator power.
10. Rotate the actuator's output shaft in the CCW direction away from the CW travel limit. Note the direction of rotation on the lobe of the cam. The correct cam lobe motion is away from the switch lever with the switch lever on the lower part of the cam. If not correct, return to step 2 and reset the cam to the proper orientation.
11. Rotate the output shaft again to the desired CW travel limit. If the stopping point is reached, the switch is properly set.
12. Repeat instructions 2–11 for setting the CCW limit switch (CCW rather than CW). Connect continuity meter across terminals B and V.
13. Replace covers and tighten cover bolts to 10 lb-ft (14 N•m) torque.
14. Rotate index (or index pointer on models 11-1__) to correspond with output shaft rotation.

# CALIBRATION Switches

## SETTING AUXILIARY SWITCHES

Standard switch settings for actuators with 2 or 4 auxiliary switches are shown on the following diagram “Standard Limit and Auxiliary Switch Settings”. The heavy line indicates a closed circuit. Follow these instructions to change the operating point of auxiliary switches:

**NOTE: In the following procedure, it is assumed that switch settings are to be adjusted so that contacts are open when the desired position is achieved. If they are to be adjusted to close, it may be necessary to reverse the operating mode of the switch by reversing the leads on the switch itself. Be sure to disconnect power from the switch terminals first.**

1. Remove the control end cover (and extensions, if applicable) and the terminal block cover (1/2” wrench).
2. Use the electric Handswitch to drive the shaft so that the switch cam is accessible. Using a 7/64” hex wrench, loosen the screw so that the cam is just snug on the shaft.
3. Move the output shaft to the desired switch trip position.
4. Turn the Handswitch to the “STOP” position.
5. ***Disconnect power from the actuator and switch terminals.***
6. Connect the continuity meter across the appropriate terminals. See the specific actuator wiring diagram under the terminal block cover (or the generic diagram at right). Rotate the cam to operate the switch.
7. Tighten the cam locking screw to 5 lb-in (1 N•m) torque.
8. Disconnect the meter and reconnect power.
9. Move the actuator’s output shaft in the desired direction to verify that the cam lobe moves away from the switch lever. If not correct, return to step 2 and reset the cam to the proper orientation.
10. Replace covers and tighten cover bolts to 10 lb-ft (14 N•m) torque.

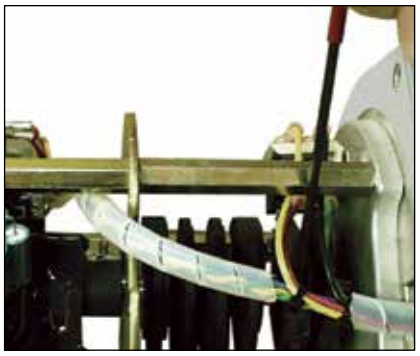

***ADJUSTING AN AUXILIARY SWITCH CAM***

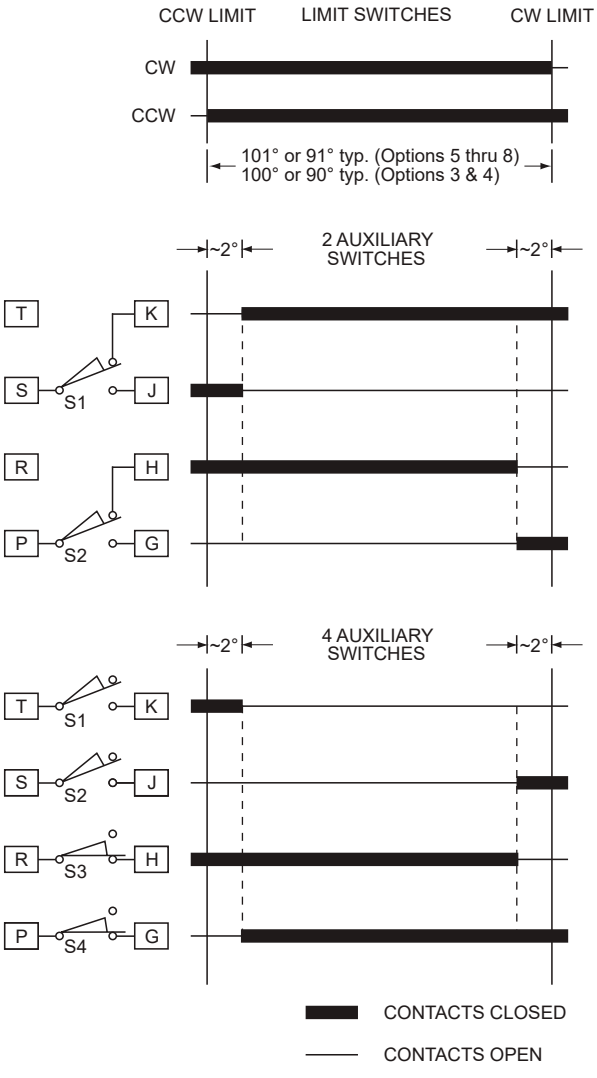


***STANDARD LIMIT AND AUXILIARY SWITCH SETTINGS***

# CALIBRATION Direction Change

## DIRECTION OF OUTPUT SHAFT ROTATION

The direction of output shaft rotation is determined by observing the end of the actuator output shaft. The rotation direction desired from an increasing signal—clockwise or counterclockwise—should be specified at the time of order. If not specified, the output shaft is factory-set to rotate clockwise in response to an increasing signal.

**NOTE: Changing direction of rotation does not change the setting of the auxiliary switches.**

## CHANGING DIRECTION OF OUTPUT SHAFT ROTATION

Procedures vary depending upon the actuator model number. The number is listed on the actuator nameplate. Determine the model number and refer to one of the following procedures.

**CAUTION**

**Be sure the actuator is disconnected from the line voltage and that all auxiliary switches are disconnected from the external power sources before beginning the direction change procedure.**

### Models 11- __3 and 11- __4

No changes are necessary for these models other than resetting the travel index.

### Model 11- __5

1. Remove the control end cover and extensions, if applicable (5/16” bolt heads).
2. Interchange the wires connected to terminals 1 and 5 of the potentiometer (i.e., the wire to terminal 1 should be moved to terminal 5 and vice versa). The wire to terminal 3 should not be moved (wiper connection). See table on page 34.
3. Reset the travel index.
4. Reset the potentiometer wiper according to the film potentiometer calibration instructions on page 35.

### Model 11-__7

**NOTE: On Model 11-__7 units equipped with an auxiliary film potentiometer, the auxiliary potentiometer is the one mounted closest to the actuator body.**

1. Remove the terminal cover, control end cover and extensions, if applicable (5/16” bolt heads).
2. Interchange the wire jumpers connected to terminals M and N.
3. Change the wires connected to the ends of the potentiometer for the ESR—this is the potentiometer farthest from the actuator body—using the table on page 34 as a guide (i.e., the wire to terminal 1 should be moved to 5 (or vice versa) and the wire to terminal 2 should be moved to 4 (or vice versa)). The wire to terminal 3 should not be moved (wiper connection).
4. If your actuator is not equipped with an auxiliary potentiometer, skip to step 6.
5. Interchange the wires connected to terminals 1 and 5 of the auxiliary potentiometer—this is the potentiometer closest to the actuator body (i.e., the wire to terminal 1 should be moved to terminal 5 and vice versa). The wire to terminal 3 should not be moved.
6. Replace the terminal cover. Torque the cover bolts to 10 lb-ft (14 N•m). Reset travel index.
7. Reset the potentiometer wiper according to the film potentiometer calibration instructions on page 35.

### Models 11-__6 and 11- __8

1. Remove the terminal compartment cover, control end cover and extensions, if applicable (5/16” bolt heads).
2. For model 11-__8, interchange the wire jumpers connected to terminals M and N.
3. For both models, determine the correct feedback signals from the wiring diagram supplied with your actuator (CC, DD, EE).
4. FOR CURRENT FEEDBACK APPLICATIONS: Record the color and location of the feedback signal wires (for reconnection later). Remove the two feedback wires. Connect a mA meter in series with a 200 ohm load resistor.
   FOR VOLTAGE FEEDBACK APPLICATIONS: Connect a voltmeter across the feedback terminals, DO NOT remove the feedback signal wires. See the table on page 60 for feedback terminals.
5. Reconnect actuator power.
6. Drive the output shaft until the CPS-5 output is 50% of the range (e.g., for 4–20 mA signal range, set output to 12 mA).
7. Ensure Handswitch is in “STOP” position.
8. Using a 7/64" hex wrench, loosen the CPS-5 rotor clamp.

*Continued*

# CALIBRATION Direction Change

| STANDARD FILM POTENTIOMETER CONNECTIONS FOR ESR | | | | | | |
|---|---|---|---|---|---|---|
| Model | Output Shaft Rotation Increasing Signal | Wire Connections To Potentiometer Terminals* | | | | |
| | | 1 | 2 | 3 | 4 | 5 |
| 157 | CW | ORG | | YEL | GRN | |
| | CCW | | GRN | YEL | | ORG |
| 207, 307, 407 | CW | | GRN | YEL | | ORG |
| | CCW | ORG | | YEL | GRN | |

*ORG wire is ESR pin 3
YEL wire (wiper connection) is ESR pin 4
GRN wire is ESR pin 5

| STANDARD FILM POTENTIOMETER CONNECTIONS FOR EXTERNAL FEEDBACK | | | | | | |
|---|---|---|---|---|---|---|
| Model | Output Shaft Rotation Increasing Signal | Wire Connections To Potentiometer Terminals* | | | | |
| | | 1 | 2 | 3 | 4 | 5 |
| 155, 157 | CW | ORG | | YEL | | GRN |
| | CCW | GRN | | YEL | | ORG |
| 205, 207, 305, 307, 405, 407 | CW | GRN | | YEL | | ORG |
| | CCW | ORG | | YEL | | GRN |

*ORG wire is Terminal Block location EE
YEL wire (wiper connection) is Terminal Block location DD
GRN wire is Terminal Block location CC

## *Changing Direction (cont'd)*

9. Rotate the CPS-5 rotor 180° and set the output back to the mid-range (e.g., 12 mA).
10. Tighten the rotor clamp.
11. Run the actuator to the 0% and 100% positions. Record the CPS-5 output at these positions.
12. Subtract the outputs recorded at the two positions and compare with the desired output signal span (e.g., 16 mA for a 4–20 mA signal range). The difference between the measured span and the desired span is the span error.
13. With the actuator at the 100% position, turn the span potentiometer to adjust the CPS-5 output signal by 1/2 of the span error calculated in step 12. Turning the span potentiometer CW increases the span equally at both ends. Turning the span potentiometer CCW decreases the span equally at both ends. See the figure on page 36 for the location of the span potentiometer.
14. Loosen the CPS-5 rotor clamp and rotate to achieve the desired value of maximum output signal (e.g., 20 mA for a 4–20 mA signal range). Rotation of the CPS-5 rotor moves the entire signal range up or down.
15. Tighten the CPS-5 rotor clamp to 5 lb-in (.56 N•m) torque. Maintain a 0.031" (.8 mm) clearance between the rotor clamp and stator.
16. Run the actuator to the 0% and 100% positions and check the output signal for desired span. If incorrect, repeat the procedure from step 2.
17. Remove the meter and resistor and reconnect the feedback wiring.
18. Replace covers and tighten cover bolts to 10 lb-ft torque. Reset travel index.
19. Model 11-__8: Check ESR-5 board calibration by following the "Checking Calibration Procedure" on page 39.

# CALIBRATION Feedback Signal

Feedback signal calibration is necessary to ensure that the signal correctly corresponds to the actuator's output shaft position. All actuators are shipped with the feedback calibrated for full 100° travel (90° for 11-16_/-26_/-36_/-46_) of the output shaft unless otherwise specified at the time of order. Minimum shaft travel available on Group 11 actuators is 60°.

The procedure to check and set feedback calibration varies by model number. The model number is listed on the actuator nameplate. Determine the model number and refer to the proper procedure below.

**NOTE: The travel limit switches must be properly adjusted before the feedback signal is calibrated. The feedback signal must be calibrated before the demand Demand signal can be calibrated.**

## Film Potentiometer Calibration Models 11-__5 and 11-__7

**NOTE: The auxiliary film potentiometer is mounted closest to the actuator body on such optionally equipped model 11-__7 units.**

When properly adjusted, the auxiliary potentiometer feedback signal should be maximum with the actuator output shaft at the 100% (maximum Demand signal) position. At 50% of travel the signal should be mid-span. At the 0% position, the signal should be minimum.

If either the auxiliary or main potentiometer on option 7 units is out of calibration, or if the feedback potentiometer on option 5 units is out of calibration:

1. Remove the ESR cover and the control end cover (5/16" bolt heads).
2. Loosen the clamping screw (use 9/64" hex wrench) on the potentiometer wiper so that it is just snug on the shaft.
3. Move the actuator to the 0% position.
4. On Model 11-__7, connect a voltmeter between the terminal with the green lead (either terminal 2 or 4) and the adjacent terminal (either terminal 1 or 5). Measure and record the voltage. Now connect the voltmeter between the terminal with the yellow lead (+) and the terminal with the green lead (–) and set the wiper on the potentiometer until the meter reads 30 mV greater than the voltage recorded in the first part of this step.
   On models 11-__5, set the wiper about 5 degrees above the position where the minimum output is reached, or as required by the control system.

**NOTE: Be sure that the wiper spans the resistive and collector elements equally, and does not touch the areas of low resistance at either end of the film element.**

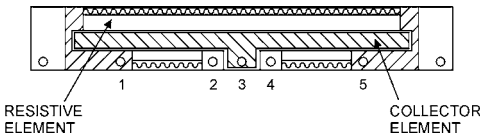


5. Tighten the clamping screw to 5 lb-in (.56 N•m) torque.
6. Operate the actuator between the 0% and 100% positions. Verify that the feedback signal is properly adjusted.
7. Use the manual Handwheel to move the actuator to the mechanical limit; do not over-torque, as damage may result.
8. Check that the wiper does not come off the resistive element. This may be verified by monitoring the output voltage and ensuring it does not fall from maximum value. If not correct, return to step 2.
9. Replace the control end cover and the ESR cover. Torque the cover bolts to 10 lb-ft (14 N•m).

## CPS-5 Calibration Model 11-__6 and 11-__8

These models are equipped with a Contactless Position Sensor (CPS-5) for position sensing and feedback. On model 11-__8, the CPS-5 also delivers a position signal to the Electronic Signal Receiver (ESR-5). Adjusting the remote feedback signal will automatically adjust the position signal to the ESR-5 on these models.

CPS-5 units are designed to provide position feedback without contacting or wiping surfaces. On option 8 units, the CPS-5 includes a Monitor/Isolator board which detects high and low out-of-limit conditions. This board monitors the CPS-5 position signal and compares it to established limits. If the output exceeds normal signal conditions, the board relay contact opens. This relay may be used for remote signal indication or activation of Loss-of-Signal operation of the actuator.

The CPS-5 provides infinite resolution by incorporating a ferrite rotor on the control shaft and a ferrite stator mounted on the position sensing circuit board. To adjust the feedback signal, first adjust the span, then change the position of the rotor on the control shaft to adjust the zero.

# CALIBRATION Feedback Signal

## Checking Feedback Signal Calibration

The following procedure should be followed to check CPS-5 calibration:

Tools required:
- mA / V dc Multimeter
- 1/2" Combination Wrench
- 200 ohm Resistor

1. Put electric Handswitch in “STOP” position.
2. Remove the terminal cover and the control end cover (5/16” bolt heads).
3. Determine the correct feedback terminals from the wiring diagram supplied with your actuator (CC, DD, EE).
4. FOR CURRENT FEEDBACK APPLICATIONS: Record the color and location of the feedback signal wires (for reconnection later). Remove the two feedback wires. Connect a mA meter in series with a 200 ohm load resistor.
   FOR VOLTAGE FEEDBACK APPLICATIONS: Connect a voltmeter across the feedback terminals. DO NOT remove the feedback signal wires. See table on page 60 for feedback terminals.
5. Drive the output shaft through its full range and check the feedback signal. When properly adjusted, the feedback signal should be maximum with the actuator’s output shaft at the 100% (maximum Demand signal) position. At 50% travel the signal should be mid-span. At 0%, the signal should be minimum. If not correct, proceed with the calibration procedure.

**NOTE: Tolerance on factory calibration is ±0.5% of span.**

## Calibration Procedure

Adjustment of the CPS-5 is necessary if the signal range requires an increase or decrease in value relative to the actuator’s output shaft rotation. Calibrate by turning the span potentiometer CW to increase the gain of the CPS-5. This has the effect of increasing the output at the high end and lowering the output at the low end equally.

Signal span is determined by the CPS-5 model and ranging resistor selected.

**CAUTION**

**Do not adjust the zero potentiometer to shift the span.**

To adjust the span, turn the span potentiometer on the CPS-5 position sensor board (see figure on page 36). The span potentiometer adjusts the CPS-5 so that an actuator output shaft rotation from 80° to 100° produces the specified output signal range.

For output shaft rotation of between 60° and 79°, it may be necessary to remove resistor R8 (100 K ohm) to change the range of the span adjustment. An R8 value of 100 K ohms produces shaft output range of 80° to 100°; R8 = 249 K ohms produces shaft output range of 70° to 79°; and removing R8 produces shaft output range of 60° to 69°. See the figure on page 37 for location of R8 (positioned on raised turrets).

Tools required for calibration:
- mA / V dc Multimeter
- 3/32" Screwdriver
- 7/64" Hex Wrench
- 1/4" Screwdriver
- 1/2" Combination Wrench
- 1/32" (.8 mm) Thickness Feeler Gauge
- 200 ohm Resistor

1. Put electric Handswitch in “STOP” position.
2. Remove the terminal cover and the control end cover (5/16” bolt heads).
3. Determine the correct feedback terminals from the wiring diagram supplied with your actuator (CC, DD, EE). This wiring diagram is located under the terminal cover.
4. FOR CURRENT FEEDBACK APPLICATIONS: Record the color and location of the feedback signal wires (for reconnection later). Remove the two feedback wires. Connect a mA meter in series with a 200 ohm load resistor.
   FOR VOLTAGE FEEDBACK APPLICATIONS: Connect a voltmeter across the feedback terminals. DO NOT remove the feedback signal wires. See the table on page 60 for feedback terminals.
5. Move the actuator to the 0% and 100% positions and record the CPS-5 output at these positions.
6. Subtract the outputs recorded at the two positions and compare with the desired output signal span (e.g., 16 mA for a 4–20 mA signal range). The difference between the measured span and the desired span is the span error.

7. With the actuator at the 100% position, turn the span potentiometer to adjust the CPS-5 feedback signal by 1/2 of the span error calculated in step 6. Turning the span potentiometer CW increases the span equally at both ends. Turning the span potentiometer CCW decreases the span equally at both ends. See figure below for the location of the span potentiometer.
8. Loosen the CPS-5 rotor clamp (see figure below) and rotate to achieve the desired value of maximum output signal (e.g., 20 mA for a 4–20 mA signal range). Rotation of the CPS-5 rotor moves the entire signal range up or down.
9. Tighten the CPS-5 rotor clamp to 5 lb-in torque. Maintain a 0.031" (.8 mm) clearance between the rotor clamp and stator.
10. Run the actuator to the 0% and 100% positions and check the feedback signal for desired span. If not correct, repeat the procedure from step 5.
11. Remove the meter and resistor, then reconnect the feedback wiring.
12. Replace covers and tighten the cover bolts to 10 lb-ft (14 N•m) torque.
13. Model 11-__8: Check ESR-5 board calibration by following the “Checking Calibration Procedure” on page 39.

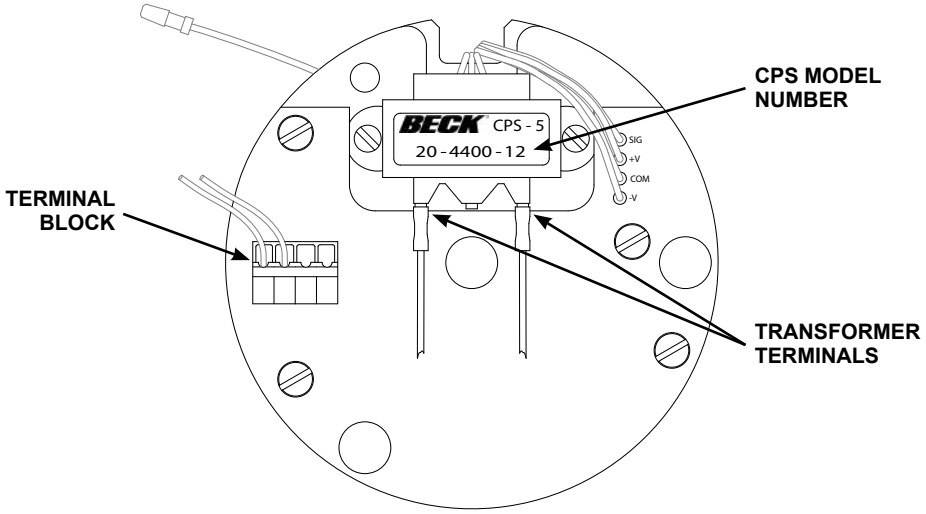


**CPS-5 MONITOR / ISOLATOR ASSEMBLY**

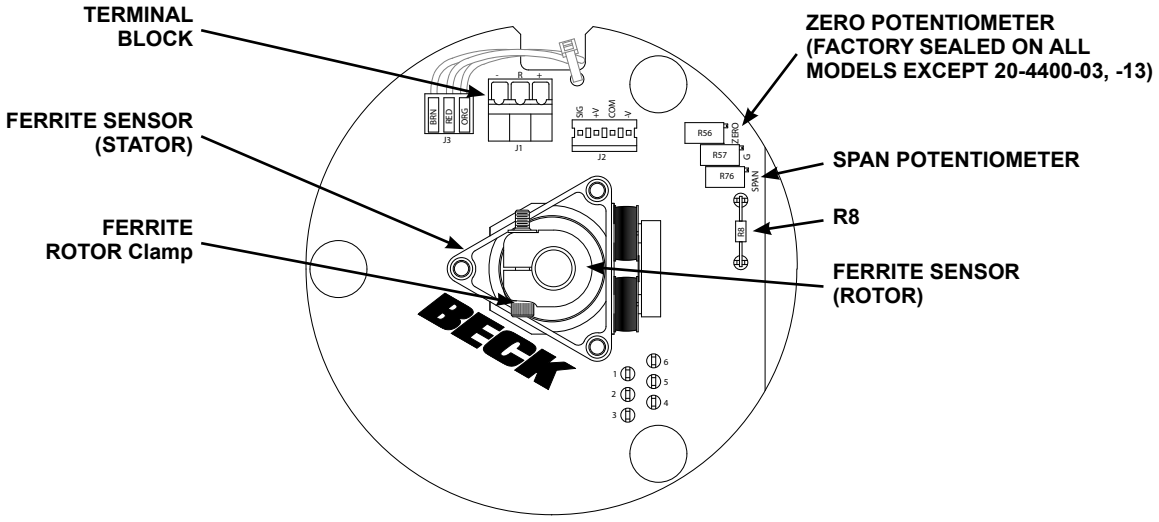


**CPS-5 POSITION SENSOR**

## Adjusting the Zero Potentiometer

The zero potentiometer is provided on CPS-5 models 20-4400-03 and -13 to change from a suppressed zero to a zero-based range (e.g., from 1–5 V dc to 0–16 V dc). The zero is adjustable from -5% to +30% of span.

**CAUTION**

**The zero is factory sealed on all CPS-5 units except 20-4400-03 and -13. Do not attempt to adjust the zero on other models as misadjustment of feedback signal and monitor/ isolator functions will result.**

**NOTE: Do not adjust the zero potentiometer to shift calibration. Adjust the rotor position only to shift calibration.**

The following example is given to illustrate how the zero is adjusted to effect a range change from 1–5 V dc to 0–16 V dc.

1. Install the 1–5 V dc unit as a 1–5 V dc range. Do not make any adjustments other than setting the rotor position.
2. Remove the jumper from terminals CC to DD and replace with a 3.01 K ohm resistor (see table on page 60). This shifts the range to 4–20 V dc.
3. Using a voltmeter at the appropriate output terminals, adjust the zero potentiometer with the actuator at minimum demand signal position so that output reads 0 V dc. This changes the range to 0–16 V dc.

## FEEDBACK SIGNAL MONITOR / ISOLATOR

CPS-5 models 20-4400-12, -13, -14, and -15 are provided with a Monitor / Isolator board that delivers an isolated position signal to the Electronic Signal Receiver (ESR-5). The board monitors the CPS-5 position signal and compares it to established limits. If the output exceeds normal signal conditions, the monitor relay contact opens. This relay may be used for either a remote signal indication or activation of Loss-of-Signal (L.O.S.) operation of the actuator.

No adjustments should be made on the Monitor / Isolator board.

## Signal Monitor Sensing Operation

A red LED indicator and an SPST relay are mounted on the Monitor / Isolator board to indicate that power is on and that the CPS-5 position signal is within normal range. The contacts open at -4% and +104%, and close at -1% and +101%.

The SPST relay is rated for 0.1 A resistive at 100 V dc.

## Loss of Signal Operation (L.O.S.)

Actuators equipped with Electronic Signal Receivers (ESR-5) are configured so that the demand signal is connected through the position signal monitoring relay on the Monitor / Isolator board of the CPS-5. The Loss-of-Signal (L.O.S.) function of the ESR-5 may therefore be activated when the CPS-5 signals are outside the normal range —contact the factory for details and instructions. For more information on the L.O.S. function, review the following section on Demand Signal Calibration.

## DEMAND SIGNAL CALIBRATION

All actuators equipped for milliamp or DC analog modulating applications include an Electronic Signal Receiver (ESR-5). The ESR-5 board consists of a voltage regulator, a signal amplifier, an error amplifier, and three solid-state output switches.

The ESR-5 board controls the position of the Beck actuator according to the demand signal it receives. A position signal is delivered to the board from either a potentiometer or the CPS-5, which is compared with the demand signal. The error signal is then amplified and used to actuate either of two switches to drive the output shaft clockwise or counterclockwise until the signals are balanced.

The third output switch is energized when the demand signal falls below a given setting (Loss Of Signal). The L.O.S. feature can be used to drive the output shaft to a predetermined position. Also, the L.O.S. LED will light on the ESR-5 board. See section on L.O.S., page 30, for further details.

**NOTE: The Demand signal is calibrated relative to the Feedback signal. Therefore, the over-travel limit switches must be properly adjusted and the Feedback signal calibrated before the Demand signal can be calibrated.**

## Checking Calibration

Using the demand signal, drive the output shaft through its complete range. Check the position feedback signal to confirm that a 10% Demand signal delivers a 10% position, a 50% signal delivers a 50% position, and a 90% signal delivers a 90% position. If the feedback signals do not correspond to the appropriate demand signals, then the ESR-5 must be calibrated. The tolerance on factory calibration is ±0.5% of span.

**CAUTION**

**The signal circuit on ESR-5 units is not grounded. If grounding is required, connect terminal BB in the terminal compartment to ground, either on the actuator body or externally.**

## Calibration Tips

The demand signal can be varied by the automatic controller, but if that is impractical, a test box may be used. Connect the test box to positive terminal AA and negative terminal BB of the terminal block in place of the controller input.

Span and zero adjustments are located near the edge of the ESR-5 board (see figure, page 41). Monitor the “FWD” and “REV” LEDs to make adjustments. When the actuator is balanced (with Handswitch in “AUTO” and not at an over-travel limit) both direction LEDs are off; when in L.O.S. mode, direction LEDs are off, but the L.O.S. LED is lit. When the output shaft is moving, the LED designating its direction of travel is lit and the other LED is off. When the actuator reaches its end of travel before balance is achieved, the LED will stay lit. Trim the adjustment so that the actuator just reaches the limit and the motor does not run. Clockwise rotation of either span or zero adjustment causes the output shaft to drive toward the zero (minimum demand signal) position.

## Calibration Procedures

**NOTE: Two calibration procedures are described below. The first procedure is to be followed if the span is in error by less than 15%. If the span is in error by more than 15% follow the second procedure.**

**CAUTION**

**Actuator will run during the following procedures.**

Tools required:

- 3/32" Screwdriver
- 1/2" Combination Wrench
- 1/4" Screwdriver
- mA / V dc Multimeter
- 200 Ohm Resistor

**If the span is in error by less than 15%:**

1. Turn the Handswitch to the "STOP" position.
2. Remove the ESR cover and the terminal block cover (5/16” bolt heads).
3. Determine the correct external feedback signal terminals from the wiring diagram supplied with the actuator (located on the inside of the terminal block cover). Connect a meter (if applicable) to monitor the feedback signal. Refer to the "Feedback Signal Calibration" section beginning on page 35 for instructions on how to connect the meter. Note: For actuators equipped with control option 7 without an auxiliary potentiometer, it is not possible to use terminals CC, DD and EE for signal measurements during calibration; instead, an external reference must be used to determine the actuator output shaft position.
4. Connect a signal source to the demand signal terminals, AA (+) and BB (–).
5. Turn the Handswitch to the "AUTO" position.
6. Apply the desired 0% demand signal to the actuator (e.g., 4 mA for a 4–20 mA input).
7. Using a 3/32" screwdriver, adjust the zero potentiometer CCW until the motor runs and the output shaft position is at least 2° from the desired 0% position. Both the “REV” & “FWD” LED will be off.
8. Adjust the zero potentiometer CW in small increments until the output shaft is at the 0% position. For actuators equipped with external feedback, the feedback signal reads 0% (e.g., 4 mA for a 4–20 mA signal). Once at the 0% position, both LEDs should be off.
9. Apply the desired 100% demand signal to the actuator (e.g., 20 mA for a 4–20 mA signal).
10. Using a 3/32" screwdriver, adjust the span potentiometer CW until the actuator motor runs and the output shaft position is at least 2° from the desired 100% position. The “FWD” LED will light and remain lit.
11. Adjust the span potentiometer CCW in small increments until the output shaft is at the 100% position. For actuators equipped with external feedback, the feedback signal reads 100% (e.g., 20 mA for a 4–20 mA signal). The “REV“ LED will light and the “FWD” LED deactivate. Once at the 100% position, both LEDs should be off.

*Continued*

# CALIBRATION Demand Signal

***Demand Calibration (cont'd)***

12. Apply the desired 0% demand signal and confirm that the output shaft is at the 0% position (the feedback signal reads 0%). If not, adjust the zero potentiometer.
13. Apply the desired 100% demand signal and confirm that the output shaft is at the 100% position (the feedback signal reads 100%). If not, adjust the span potentiometer.
14. Repeat steps 12 and 13 until the meter readings stay within an acceptable range.
15. Remove the meter and any local signal sources and reinstall the demand signal and feedback signal wiring. Replace the compartment covers and tighten the bolts to 10 lb-ft (14 N•m).

**For a span error greater than 15%:**

1. Turn the Handswitch to the "STOP" position.
2. Remove the ESR cover and the terminal block cover (5/16" bolt heads).
3. Determine the correct external feedback signal terminals from the wiring diagram supplied with the actuator (located on the inside of the terminal block cover). Note: For actuators equipped with control option 7 without an auxiliary potentiometer, it is not possible to use terminals CC, DD and EE for signal measurements during calibration. Instead, an external reference must be used to determine the actuator output shaft position.
4. Connect a meter (if applicable) to monitor the feedback signal.
5. Turn the Handswitch to the "AUTO" position.
6. Short the demand signal terminals AA and BB.
7. Short resistor R35 temporarily with a clip lead. Note: The board has conformal coating; take extra care to ensure proper connection.
8. Using a 3/32" screwdriver, adjust the zero potentiometer CW in small increments until the output shaft is at the 0% position. For actuators equipped with external feedback, the feedback signal reads 0% (e.g., 4 mA for a 4–20 mA signal).
9. Remove the short on the demand signal terminals and apply a demand signal equal to the span (e.g., 16 mA for a 4–20 mA signal). If the actuator has not been wired, the demand signal is connected at terminals AA (+) and BB (–).
10. Using a 3/32" screwdriver, adjust the span potentiometer CCW in small increments until the output shaft is at the 100% position. For actuators equipped with external feedback, the feedback signal reads 100% (e.g., 20 mA for a 4–20 mA signal).
11. Remove the clip lead from R35. Apply the desired 100% demand signal (e.g., 20 mA for a 4–20 mA signal).
12. Adjust the zero potentiometer CCW (may require 10–15 turns) until the output shaft is at the 100% position (the feedback signal reads 100%).
13. Apply the desired 0% demand signal and confirm that the output shaft is at the 0% position (the feedback signal reads 0%). If not, adjust the zero potentiometer.
14. Apply the desired 100% demand signal and confirm that the output shaft is at the 100% position (the feedback signal reads 100%). If not, adjust the span potentiometer.
15. Repeat steps 13 and 14 until satisfied with the adjustment.
16. Remove the meter and any local signal sources and reinstall the demand signal and feedback signal wiring. Replace the compartment covers and tighten the bolts to 10 lb-ft (14 N•m).

## Span

The basic span adjustment of the ESR-5 is 2–6 volts dc. This is adjustable with the 20-turn span potentiometer. To make the span adjustable from 2–9 volts dc, remove jumper J2. To make the span adjustable from 9–12 volts dc, remove jumper wire J1. To make the span adjustable from 12–16 V dc, remove J1 and J2. See figure on page 41 for location of jumpers on the ESR-5 board.

## Zero

The basic zero adjustment is -20% to 100% of span. This is adjustable with the zero potentiometer. For split range applications, see page 25.

## Filter Adjustment

The input filter is adjusted at the factory for maximum attenuation of disturbances on the demand signal (fully CW). This introduces a 1% drift (with 60 second timing) in response to a loss of Demand signal when "stay-in-place" is selected. If this is objectionable or if livelier response is desired, the filter action can be reduced by turning the filter adjustment potentiometer CCW a sufficient amount. Fully CCW takes the filtering out completely but in some cases may lead to undesirable cycling. If this happens, turn the adjustment CW until the cycling is damped out. See figure on page 41 for location.

## Deadband Adjustment

The deadband values of 0.6% for CPS-5 or film potentiometer operation are chosen to satisfy the requirements of most control systems. If excessive process and / or signal noise is present, the actuator may be subject to unnecessary cycling. It is recommended that excessive noise be reduced at the source in order to prevent unnecessary cycling. This will improve process control and prolong component life.

If it is not possible to eliminate the excessive noise, the actuator's deadband can be widened; however, this will reduce the resolution of the actuator. Widening the deadband to 1% can be accomplished by removing jumper J3 on the ESR-5 board. Further change of the deadband is possible by changing the value of R42, but only after J3 is removed. See table below.

**DEADBAND/RESISTOR VALUES**

| J3 | R42 | Deadband |
|---|---|---|
| Remove | 4.99 MΩ | 1.0% |
| Remove | 3.30 MΩ | 1.6% |
| Remove | 2.20 MΩ | 2.4% |
| Remove | 1.50 MΩ | 3.5% |

## L.O.S. Trip Point

If the Demand signal drops below a predetermined value, the L.O.S. feature is activated. For example, if the Demand signal is 4–20 mA, the L.O.S. trip point would be approx. 1.92 mA, with normal operation resuming before the signal reaches 4.0 mA. If the Demand signal is 1–5 V, the L.O.S. trip point would be 0.48 V, with normal operation resuming before the signal reaches 1 V.

If it is necessary to change the L.O.S. trip point, resistors R20 and R21 must be replaced. See the applicable table below.

The L.O.S. function may be disabled by removing R19.

**L.O.S. TRIP POINT/RESISTOR VALUES (FOR CPS EQUIPPED ACTUATORS)**

| L.O.S. Trip Point mA | % of Span | L.O.S. Reset Point, mA | % of Span | Resistor Values | |
|---|---|---|---|---|---|
| | | | | R20 KΩ | R21 KΩ |
| 2.1 | 12 | 3.6 | 2.5 | 30.1 | 4.42 |
| 1.6 | 15 | 3.6 | 2.5 | 37.4 | 7.32 |
| 0.8 | 20 | 3.6 | 2.5 | 38.3 | 11.3 |

**L.O.S. TRIP POINT/RESISTOR VALUES (FOR FILM POT. EQUIPPED ACTUATORS)**

| L.O.S. Trip Point mA | % of Span | L.O.S. Reset Point, mA | % of Span | Resistor Values | |
|---|---|---|---|---|---|
| | | | | R20 KΩ | R21 KΩ |
| 2.1 | 12 | 3.6 | 2.5 | 30.1 | 4.42 |
| 1.4 | 16 | 3.6 | 2.5 | 35.7 | 8.25 |
| 0.8 | 20 | 3.6 | 2.5 | 36.5 | 11.3 |

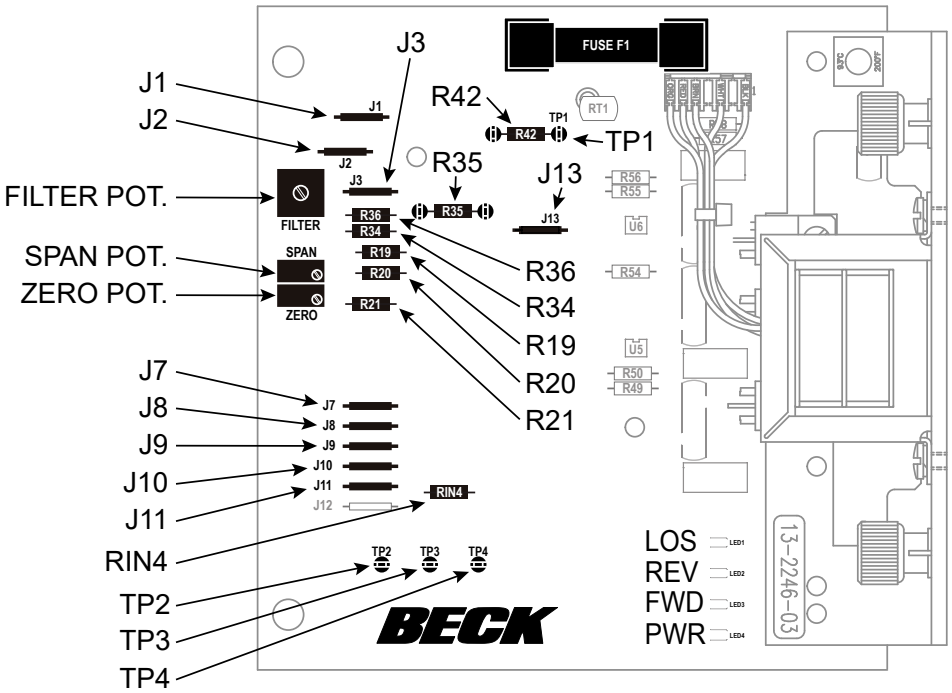


**ESR-5 COMPONENTS**
**(13-2246-03 shown)**

# CALIBRATION Demand Signal

## RELAY BOARD OPERATION AND CALIBRATION

The Relay board is a solid-state interface to permit switching large control motor currents with low-current ac or low-voltage dc inputs.

**Low-current 120 V ac Relay Board Calibration Procedure (Relay Board 13-2246-50):**

**NOTE: When used in low-current AC applications, the Relay board provides a load of 10 mA to the controller. If the controller requires a larger minimum load, the user must provide additional load external to the control drive.**

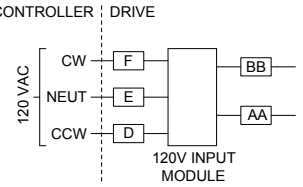


1. Disconnect the actuator from line voltage and remove the terminal cover and ESR cover (5/16” bolt heads).
2. Remove control signal wires from terminals D, E and F.
3. Attach voltmeter to test points TP1 (+) and TP2 (-). See figure below for location of test points on the Relay board.
4. Turn on line voltage.
5. Adjust potentiometer R3 to bring the meter reading to +0.17 volts (±0.01 V dc). See figure below for location of potentiometer R3.
6. Disconnect the actuator from line voltage and reconnect control signal wires to terminals D, E and F.
7. Check operation of the actuator with system signals.
8. Replace covers and tighten cover bolts to 10 lb-ft (14 N•m) torque.

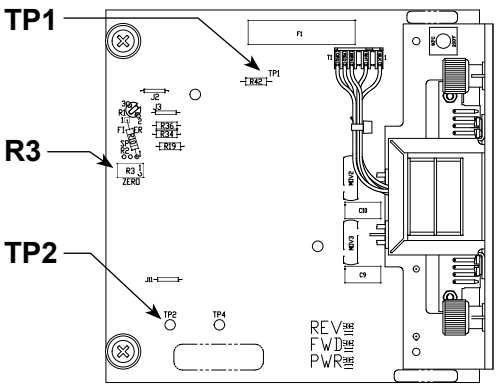


**Low Current 120 V ac Relay Board Components**

**Low-voltage 24 V dc Relay Board Calibration Procedure (Relay Board 13-2246-51):**

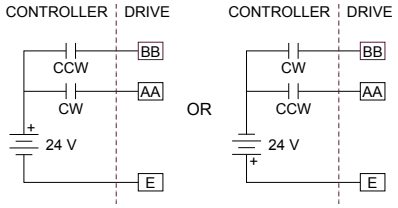


1. Disconnect the actuator from line voltage and remove terminal cover and ESR cover (5/16” bolt heads).
2. Remove control signal wires from terminals AA and BB.
3. Attach voltmeter to test points TP1 (+) and TP2 (-). See figure below for location of test points on the Relay board.
4. Turn on line voltage.
5. Adjust zero potentiometer R3 for -0.2 V at TP1 with neither Demand signal applied. See figure below for location of zero potentiometer R3.
6. Adjust span potentiometer R2 for -0.2 V at TP1 with both control signals applied simultaneously. See figure below for location of span potentiometer R2.
7. Disconnect the actuator from line voltage and reconnect control signal wires to terminals AA and BB.
8. Check operation of the actuator with system signals.
9. Replace covers and tighten cover bolts to 10 lb-ft (14 N•m) torque.

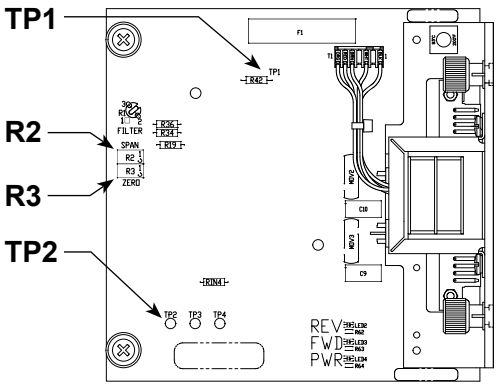


**Low Voltage 24 V dc Relay Board Components**

## LUBRICATION / GEARING

Periodic lubrication is not required on Beck actuators. However, if your actuator has a linkage with rod ends supplied by Beck, the rod ends should be included in your scheduled lubrication program.

During major maintenance outages, it is recommended that older actuators should be inspected to ensure that the gearing is not worn or damaged.

**CAUTION**

**Before removing the gear module assembly from the actuator body, secure the output shaft to prevent movement.**

To inspect the gears, remove the gear module assembly on the 11-2__, -3__ and -4__. On Model 11-1__, the motor must be removed to access the gears. Clean the gears, removing as much old lubrication as possible.

Examine the gear teeth, shaft bore, and gear shafts for signs of excessive wear, scoring, or other damage. If there is no evidence of damage to the gearing, recoat the teeth and shaft bores of all gears with a heavy layer of Fiske Lubriplate GR-132 or equivalent (GR-132 is an extreme pressure grease with polymer additives). The ball bearing on the output shaft and crown gear shaft have double grease seals and require no maintenance for the life of the bearings. Inspect all other grease seals and replace any that show wear. Reassemble the actuator, referencing the outline dimension drawings beginning on page 6 for appropriate bolt torques.

If it should ever be necessary to replace the output shaft assembly, 3rd combination gear, or output shaft bearings, a major overhaul is required and the actuator must be returned to the factory for a repair evaluation.

***11-4__ Gear Module***

# MAINTENANCE Component Replacement

This section covers replacement of many components of the actuator. Note that some components are not field-repairable. Refer to the outline dimension drawings on pages 6–12 and to the cutaway drawings in the components appendix for location of components on the actuator.

If it should ever be necessary to replace the output gear, shaft, or output shaft bearings, a major overhaul is required and the actuator should be returned to the factory. During a major overhaul, the factory repair department will update the actuator to include all possible engineering improvements. See "HOW TO OBTAIN SERVICE" at the end of this manual.

## Gaskets

During routine service, inspect removed cover gaskets for wear or damage. In order to protect internal components, worn or damaged gaskets and O-rings should be replaced.

To remove, scrape all of the old adhesive and gasket material from the body housing and cover, if necessary. Replacement gaskets are self-adhering, silicone rubber. Peel the backing off the replacement gasket and carefully apply to the actuator body.

## Seals

Worn or damaged output shaft, control end shaft, and motor shaft seals should be replaced to prevent damage to internal bearings and drive train parts.

To remove the shaft seal, push the blade of a small screwdriver along the shaft and under the seal lip. CAUTION: The seal is approximately 1/4" (6.35 mm) wide. Do not force the screwdriver blade beyond the width of the seal; damage to the shaft bearing could result. Pry up on the seal and force it out of the housing. Clean the shaft and housing then press in the replacement seal with the closed side facing outward.

## Bearings

The Beck electric actuator contains ball bearings on the output shaft, control end shaft, and motor shaft. Bushings and thrust washers are used on combination gears. Field replacement of these components is not recommended.

Motor shaft bushings in the body of the 11 -1__ and 11-4__ can be replaced. TIP: To remove, fill the bushing with a heavy grease. Select a drive pin that slip fits into the bushing. Insert the pin into the bushing and tap with a mallet. This will force the bushing out of the body casting.

## Motor

The control motor is not field-repairable. Disassembly of the motor will result in a loss of torque that can only be restored by returning the motor to the factory for re-magnetizing.

**CAUTION**

**Before removing the control motor, block the actuator crank arm to prevent the crank arm and the gear train from moving when the motor is removed.**

To remove the motor, first disconnect the motor wires in the terminal compartment of the actuator. In the 11-2__, -3__, and -4__ actuators, remove the terminal block and plate as an assembly. Remove the black wire from the terminal post, cut the red motor wire near the red-yellow-red butt joint and disconnect the green wire from the motor capacitor. Remove the mounting bolts and motor. Carefully slide the motor out of the actuator body.

To install the motor, insert the three-wire sleeve through the wire hole in the motor mount and into the terminal compartment. Carefully slide the motor into the actuator body. Rotate the motor shaft, if necessary, to engage the pinion with the first combination gear. Install motor mounting bolts and torque to recommended values. Reconnect the motor wires. See the following section for reinstalling the terminal plate.

## Motor Resistor and Capacitor

The motor resistor and capacitor are located under the terminals in the terminal compartment. To replace a resistor or capacitor, remove the terminal cover. In the 11-2__, -3__, and -4__, remove the terminal plate. Remove the existing part and transfer the wires one at a time to the replacement part. Inspect the terminal plate gasket and replace if necessary. To ensure a watertight seal between the plate and gasket, coat the gasket with a thin film of grease before replacing the terminal plate. Torque the screws to 3 lb-ft (4 N•m).

## SELF LOCKING MECHANISM (SLM)

The Self Locking Mechanism (SLM) is assembled to the front of the motor and couples the motor to the gear train. The primary function of the SLM is to lock the gear train in place when the motor is de-energized. When the motor is energized, the SLM releases and allows the motor to drive the gearing.

There is no recommended maintenance interval for the SLM. The SLM can last for many years in normal service. SLM wear is a function of loading and the number of starts/stops the motor experiences over time. Overloading or stalling the actuator will accelerate SLM wear.

Signs of wear include the inability of the actuator to hold position when the motor is de-energized. This could result in persistent on-off oscillation. Severe SLM wear or damage may result in a loss of torque at the output shaft.

It is often possible to confirm SLM wear or damage by checking motor operation with the Handwheel. Place the Handswitch in the STOP position, and rotate the motor Handwheel back and forth. There should be free play before the motor pinion/gearing turns (up to one tenth of a full Handwheel rotation). Lack of free play or rough motor movement may indicate the need for SLM reconditioning.

Disassembly and close inspection of the SLM components is required to fully evaluate its condition.

**WARNING**

**Electrical shock hazard. Disconnect power before proceeding.**

**Support the load before removing the motor/SLM from the actuator.**

**SLM REBUILD KIT MAJOR COMPONENTS**
**(Descriptions & Part Numbers)**

| **Model Number** | **11-1__** | | | **11-2__ / 11-3__** | | **11-4__** | |
|---|---|---|---|---|---|---|---|
| **Motor Assembly** | **20-2204-20** | **20-2700-20** | **20-2701-20, -51** | **20-2704-21** | **20-2705-21, -51** | **20-2201-31, -32, -33** | **20-2201-35** |
| **Rebuild Kit** | **12-8066-38** | **12-8066-37** | **12-8066-36** | **12-8066-39** | **12-8066-40** | **12-8067-13** | **12-8067-14** |
| Spring | 14-9980-01 | 14-9980-10 | 14-9980-12 | 14-9980-01 | 14-9980-06 | 14-9980-26 | |
| Friction Material GL181-134 | 14-9409-58 | 14-9409-56 | | 14-9409-58 | | 14-9409-52 | |
| Spring Pin | 10-7111-03 | 10-7111-06 | | 10-7111-03 | | 10-7111-05 | |
| Stop Collar | 14-9380-10 | 14-9380-09 | | 14-9380-08 | | N/A | |
| Thrust Washer/ Bearing | 14-9400-21 | 14-9400-16 | | 13-0350-01 | | 14-9400-02 | |
| Pinion | 14-9940-44 | 14-9940-10 | | 14-9940-06 | | 14-9940-17 | 14-9701-12 |
| Steel Ball | 14-9420-01 (8) | 14-9420-02 (6) | | 14-9420-01 (8) | | 14-9420-03 (8) | |
| Locking Disc | 14-9330-05 | 14-9330-15 | | 14-9330-05 | | 14-9330-19 | |
| Steel Shim | 30-0315-23 | | | 30-0315-45 (2) | | N/A | |
| Steel Shim | 30-0315-24 | | | 30-0315-46 (2) | | N/A | |
| Motor Gasket | 20-0660-15 | | | 20-0660-27 | | 20-0660-08 | |
| Instruction Sheet | 80-0016-16 | 80-0016-05 | | 80-0016-07 | | 80-0016-02 | |
| Terminal Joint | 20-0032-01 (3) | | | | | | |
| Slip-on Terminal | 20-0030-01 | | | | | | |
| Spacer | N/A | | | | | 20-2090-03 | 20-2311-07 |
| O-ring | N/A | | | | | 14-9840-16 | |
| Motor Screw | 30-0307-35 (4) | | | 30-0311-86 (4) | | 30-0306-40 (4) | |

# MAINTENANCE Component Replacement

### DISASSEMBLY AND CLEANING

When wear or damage is suspected, disassembly and cleaning may be required to determine the extent of needed repairs. Individual parts may be replaced, with the exception of the actuator collar, which is not field replaceable. Refer to the illustration on page 46.

*For SLM disassembly and inspection*:

1. Disconnect power from the actuator.
2. Secure the actuator load, and remove the motor assembly (see page 44). Handle the motor with care so as not to damage the rotor shaft.
3. Pushing down firmly on the pinion, measure the gap between the stop collar and the thrust washer. This distance should measure 0.015 ± 0.005" for motors on models 11-1__, 11-2__, and 11-3__. This distance should measure 0.025 ± .005" for motors on models 11-4__. An excessive gap indicates worn SLM components.
4. Use a felt tip pen to mark the location of the stop collar (or castle nut) on the shaft. Support the end of the rotor shaft to prevent it from bending, and drive the 1/8" spring pin out (or loosen the castle nut). Carefully (the spring assembly is spring-loaded), remove the stop collar (or castle nut), thrust washer/bearing, spacer (models 11-4__ only), pinion, spring, and steel balls. On 11-4__ models, remove the (4) 1/4-20 screws and the front motor end (see the 11-4__ SLM Components figure at right). DO NOT remove the front motor shield or the rotor from the stator on any model.

**CAUTION**

**Do not disassemble the motor any further, as it has no other user serviceable parts. Further disassembly will result in demagnetization of the motor and loss of the required torque.**

5. Clean grease from the pinion and locking disc for inspection. A small amount of dust residue from the friction material is normal. Clean the actuator collar detents with a rag and inspect for wear. Inspect the friction material for excessive wear or damage. If the friction material does not appear to be damaged, clean with alcohol to remove any contaminants.
6. Identify worn parts and replace as needed. Note, wear on the pinion teeth may indicate wear on the meshing gear. Further inspection of the gear module assembly is recommended. Drive collar detent wear will require factory repair of the motor.

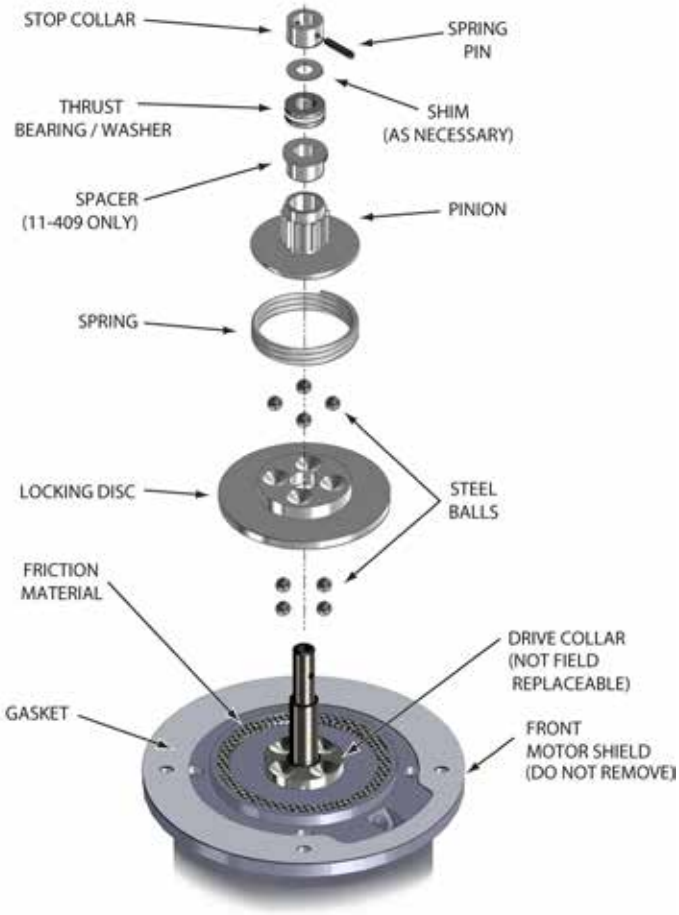


***11-1/2/3__ SLM COMPONENTS***

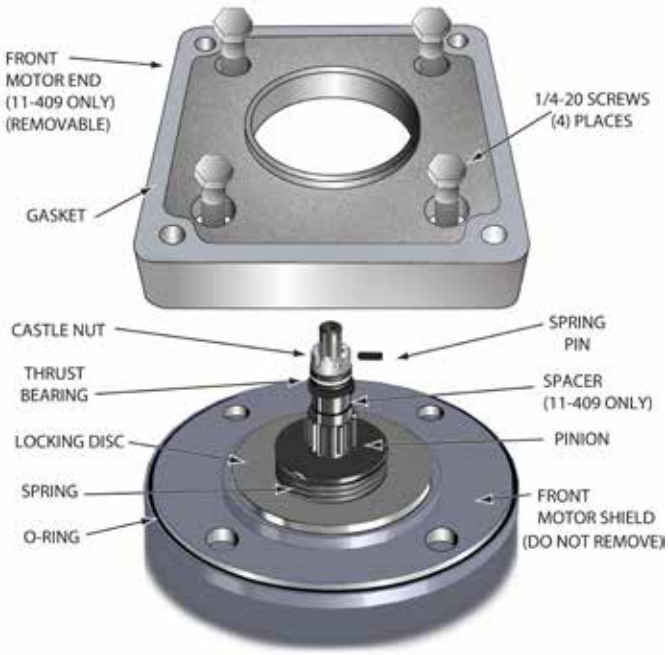


***11-4__ SLM COMPONENTS***

### *REPLACEMENT AND REBUILD INSTRUCTIONS*

1. If the friction material requires replacement, scrape off the old friction material and thoroughly clean the bonding surface to ensure flatness for the new friction material. Glue the new friction material in place with Loctite 454 Instant Adhesive or equivalent, taking care to keep the material flat and clean.
2. Apply a film of grease (Fiske Lubriplate GR-132 or equivalent) to the surface of the ball detents (12 or 16 places depending on the model). Apply a *thin* film of grease to the inner diameter of the locking disc bore. Do not let the grease contact any friction surfaces. Excess grease can contaminate the friction surface and reduce SLM effectiveness.
3. With the motor shaft pointed up, place a steel ball into each of the actuator collar detents. Install the locking disc and place a steel ball into each of the detents on the top of the locking disc.

***Continue with the appropriate steps for your model number as follows.***

#### *Models 11-1__, 11-2__ & 11-3__*

4. Install the pinion, thrust bearing/washer, and stop collar as follows: On model 11-1__ actuators, the white side of the thrust washer should face the pinion. Make sure all steel balls are properly seated in the detents of the drive collar, locking disc, and pinion. Align the stop collar with the shaft marks made during disassembly and insert a 1/8” pilot punch through the stop collar hole and into the motor shaft to hold it in place.
5. Pushing down firmly on the pinion, measure the gap between the stop collar and the thrust bearing/washer. This distance should measure 0.015 ± .005”. This space is necessary to ensure proper operation. Add/remove shims as necessary. Install the new 1/8” spring pin while supporting the shaft.
6. Install the spring by slipping it over the pinion flange and twisting it into place.
7. On model 11-1__ actuators, reassemble combination gears onto the motor end. On all models, recoat the gear teeth and components above the pinion liberally with a layer of Fiske Lubriplate GR-132 or equivalent.

#### *Models 11-4__*

4. Install the spring on top of the locking disc. Compress the spring by pushing down with the pinion. While holding the pinion in place, install the spacer, thrust bearing, and castle nut (stop collar). Note: The grooved washers on each end of the thrust bearing have differently sized holes; the end with the washer having the smallest hole should be installed next to the castle nut. Thread the castle nut onto the shaft to hold the spring in compression.
5. Replace the front motor end O-ring (see figure below) and install the front motor end with the (4) 1/4-20 screws in a crisscross pattern, torquing to 6 lb-ft (8 N•m). Place RTV around the wire entry into the motor.
6. Pushing down firmly on the pinion, measure the gap between the castle nut and the thrust bearing. This distance should measure 0.025 ± .005”. This space is necessary to ensure proper operation. Tighten or loosen the castle nut as necessary to achieve the proper gap and simultaneously align one of the slots with the hole in the motor shaft. One complete slot rotation will change the gap by 0.009”. Install the new 1/8” spring pin while supporting the shaft.
7. Recoat the gear teeth and components above the pinion liberally with a layer of Fiske Lubriplate GR-132 or equivalent.

## OVER-TRAVEL LIMIT AND AUXILIARY SWITCHES

Complete switch assemblies may be replaced. It is not possible to replace individual switches. To replace switch assemblies, follow the instructions below.

**WARNING**

**Electrical shock hazard. Disconnect power before proceeding.**

Remove the control end cover by loosening the four captive, socket head cap screws (1/2" wrench). Remove the screws holding the switch assembly to the switch plate and slide it out to the side.

Transfer the wires to the terminals of the replacement assembly, ensuring the correct wire is transferred to the correct replacement assembly terminal (wires have push-on lugs). Install the replacement assembly and note that it rotates around one screw to permit an adjustment of the cam-to-switch lever spacing and switch operating point. To set the switch, place a .030" (.75 mm) shim between the cam and switch lever (see photo to right). The switch lever should be on the low or minimum radius portion of the cam when setting the switches. Position the switch assembly so that the switch is just actuated. DO NOT overstress the switch lever. Tighten both screws to 10 lb-in (1 N•m) torque and remove the shim.

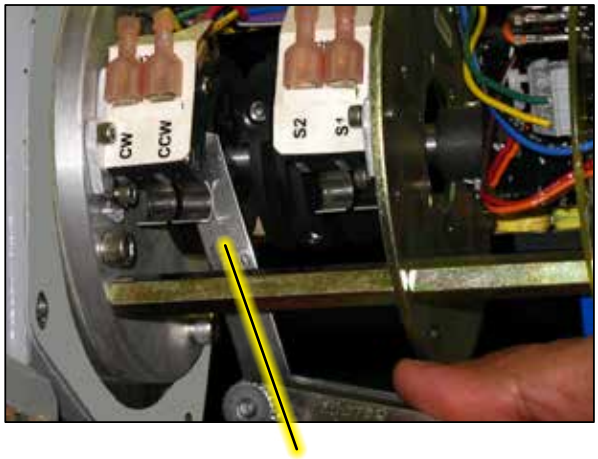


.030" (.75 mm) shim should be inserted between all levers and cams when setting switches.

## ADDING AUXILIARY SWITCHES

It is sometimes possible to add auxiliary switches in the field. If the actuator was built with two or less auxiliary switches, they may be added in multiples of two, for a total of up to four auxiliary switches. See the table at right for part numbers.

Install wiring onto the switch push-on lugs and route the wires into the actuator terminal area. Remove the terminal compartment cover and solder wires to the underside of the terminal board according to the wiring diagram included with the new switch assembly. Install the new switch assembly and adjust according to the preceding instructions.

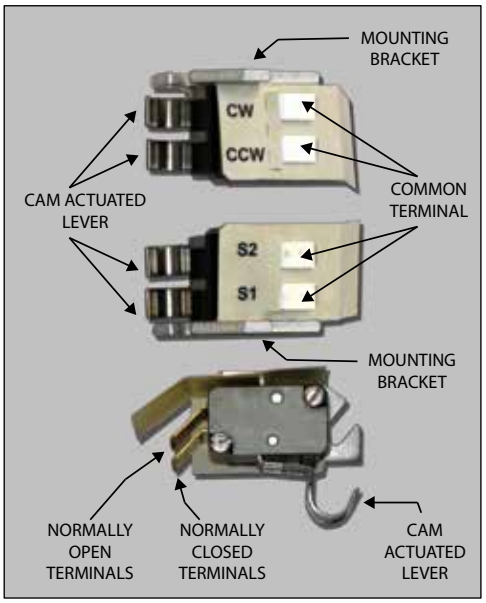


***SWITCH PARTS***

| *Description* | *Part Number* |
|---|---|
| Over-travel limit switch assembly (CW/CCW) | 20-3202-10 |
| Auxiliary limit switch assembly, (2) switches (S1/S2) | 20-3202-11 |
| Auxiliary limit switch assembly, (4) switches (S1/S2/S3/S4) | 20-3202-12 |
| Limit switch cam assembly | 11-0931-02 |

## FUSE (F1) REPLACEMENT (FOR ACTUATORS EQUIPPED WITH OPTIONAL 208V OR HIGHER POWER SUPPLY)

If it is necessary to replace the power fuse (F1), use the following procedure:

**WARNING**

**Electrical shock hazard. Disconnect power before proceeding.**

Remove the terminal block cover. Locate the fuse holder (similar to the illustration below).

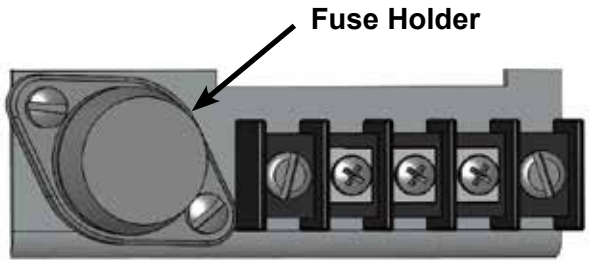


Turn the fuse holder CCW while pressing down. The fuse holder should spring loose when free. Remove the fuse holder from the actuator. Pull the fuse free from the holder. Replace the fuse with the same type (see table below) by pushing it into place.

Reinsert the fuse holder into the actuator. Turn the fuse holder CW while pressing down to tighten. Replace the terminal block cover. Tighten the cover screws to 6 lb-ft (8 N•m) torque.

### REPLACEMENT FUSES (F1)

| Actuator | Input Voltage | Amps | Volts | Type | Part No. |
|---|---|---|---|---|---|
| 11-150 -160 | 208 | 0.75 | 250 | Time Delay | 11-1370-23 |
| | 240 | 0.75 | 250 | Time Delay | 11-1370-23 |
| | 380 | 0.4 | 600 | Time Delay | 11-1372-18 |
| | 415 | 0.3 | 600 | Time Delay | 11-1372-17 |
| | 480 | 0.3 | 600 | Time Delay | 11-1372-17 |
| | 575 | 0.25 | 600 | Time Delay | 11-1372-28 |
| 11-200 -260 -300 -360 | 208 | 1.0 | 250 | Time Delay | 11-1370-24 |
| | 240 | 1.0 | 250 | Time Delay | 11-1370-24 |
| | 380 | 0.6 | 600 | Time Delay | 11-1372-14 |
| | 415 | 0.5 | 600 | Time Delay | 11-1372-27 |
| | 480 | 0.5 | 600 | Time Delay | 11-1372-27 |
| | 575 | 0.4 | 600 | Time Delay | 11-1372-18 |
| 11-400 -460 | 208 | 3.2 | 250 | Time Delay | 11-1370-25 |
| | 240 | 3.2 | 250 | Time Delay | 11-1370-25 |
| | 380 | 1.8 | 600 | Time Delay | 11-1372-32 |
| | 415 | 1.6 | 600 | Time Delay | 11-1372-31 |
| | 480 | 1.4 | 600 | Time Delay | 11-1372-30 |
| | 575 | 1.25 | 600 | Time Delay | 11-1372-29 |

## ESR-5 BOARD

Field repair of the ESR-5 board is not recommended.

**WARNING**

**Electrical shock hazard. Disconnect power before proceeding.**

To replace the ESR-5 board, remove the ESR-5 compartment cover (four captive, 5/16" hex head screws). Loosen the four captive screws holding the board to its mounting pads. Note the "L" shaped mounting bracket on the end of the board. To remove the board, pull the mounting bracket away from its mating surface and connector receptacle, using a gentle, rocking motion.

To install an ESR-5 board, lightly press the board connector into its receptacle until the mounting bracket is flush with its mating surface. Tighten the four captive screws to 8 lb-in (0.9 N•m). Replace the ESR-5 compartment cover and tighten the cover screws to 10 lb-ft (14 N•m) of torque.

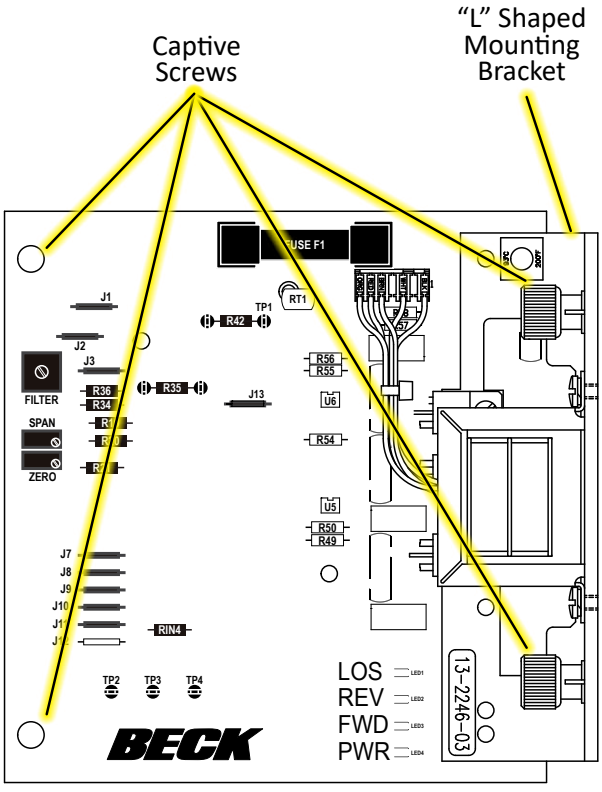

# MAINTENANCE Component Replacement

## CPS-5

Field repair of the CPS-5 is not recommended.

**WARNING**

**Electrical shock hazard. Disconnect power before replacing the CPS-5.**

When replacing the CPS-5, this includes the rotor and stator/circuit board assembly. When returning the CPS-5 to the factory for service, do not separate the rotor and stator/circuit board assemblies from their mounting plates. The rotor should be held inside the stator with rubber bands when shipping.

The CPS-5 is configured to produce a position signal voltage between 1 and 5 volts over 100 degrees of travel; units configured for 90 degrees of travel will produce a position voltage between 1.2 and 4.8 volts. Configured properly, the CPS-5 raw position signal (measured at TP1 & TP4) increases as the output shaft rotates clockwise.

### *REMOVE THE EXISTING CPS-5 ASSEMBLY:*

1. Run the actuator to its midpoint of travel with the local Handswitch.
2. Disconnect 120 V ac power to the actuator. Remove the terminal and control end compartment covers (1/2" wrench).

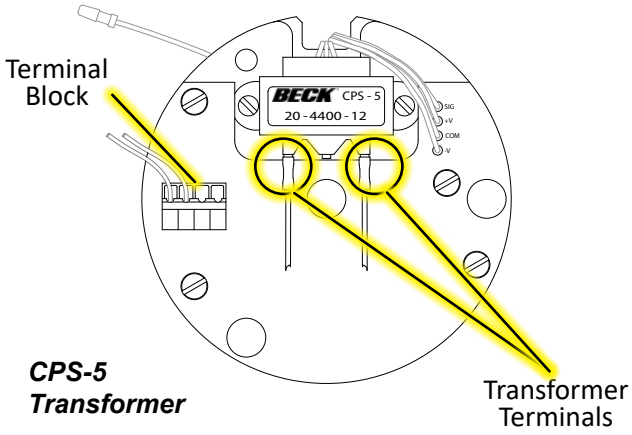


***CPS-5 Transformer***

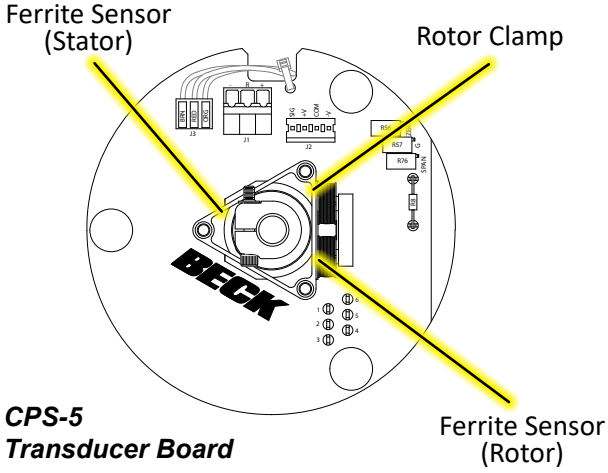


***CPS-5 Transducer Board***

3. Record the wire colors on the terminal block of the CPS-5 (see illustration at left), then disconnect the wires. The terminals are spring-loaded. To remove a wire, press the tip of a small screwdriver into the slot at the top of the small lever. Push down to open the spring-loaded contact and release the wire.
4. Pull the wires from the transformer (see illustration) back through the wire hole in the CPS-5.
5. Loosen and remove the 3 hex studs that clamp the CPS-5 in place. Ensure that the inboard hex stud is not loosened as the outboard stud is loosened.
6. Slide the CPS-5 stator assembly off the three mounting bolts.
7. Note the position of the rotor clamp, then loosen the rotor clamp screw and remove the rotor from the shaft.

### *INSTALL THE NEW CPS-5 ASSEMBLY:*

8. Remove the rotor from the replacement CPS-5 assembly. Slide the rotor, clamp end first, onto the control shaft as close to the mounting plate as possible. Leave the clamp loose. Position the clamp similarly to the one removed previously.
9. Slide the new CPS-5 assembly over the studs and rotor. Replace the hex nuts but do not tighten. Carefully slide the rotor back into the CPS-5 assembly. Twist the rotor while sliding to prevent damage to the assembly. Tighten hex nuts to 5 lb-ft (7 N•m).
10. Thread the wires through the wire holes in the CPS-5 and reconnect them to the transformer and terminal block.
11. Restore 120 V ac power to the actuator and connect a meter to the output.

    CURRENT FEEDBACK APPLICATIONS: Record the color and location of the feedback signal wires for re-connection later. Remove the two feedback wires. Connect a mA meter in series with a 200 ohm load resistor.

    VOLTAGE FEEDBACK APPLICATIONS: Connect a voltmeter across the feedback terminals. DO NOT remove the signal feedback wires.
12. Insert a 0.031" (.80 mm) feeler gauge between the rotor clamp and stator. Position the clamp 0.031" (.80 mm) from the stator.
13. Rotate the rotor on the control shaft until the output on the mA or voltmeter reads 50% of signal span, then tighten the clamp to 5 lb-in (.56 N•m) torque.
14. Check the feedback signal calibration as described on page 36.

## HANDSWITCH

**WARNING**

**Electrical shock hazard. Disconnect power before proceeding.**

***REMOVE THE EXISTING HANDSWITCH:***

1. Remove power from the actuator.
2. Remove the terminal cover (1/2” wrench).
3. To access the Handswitch, the terminal barrier plate must be removed on all models except the 11-1__.
4. Clip the five wires from the old Handswitch (removing any tie wraps or sleeving that may interfere).
5. Remove the Handswitch knob by loosening the two inset screws (5/64" hex wrench).
6. Remove the threaded bushing behind the Handswitch knob. The remaining Handswitch assembly components may now be removed from the terminal compartment.

***INSTALL THE NEW HANDSWITCH:***

7. Insert the new threaded bushing through the actuator onto the shaft, then attach the components leading to the switch as shown in the illustration below.
8. Place the seal in the bushing, then insert the knob over the bushing. Tighten the two inset screws to 3 lb-ft (4 N•m).
9. Splice the wires from the new Handswitch assembly to the wires from the actuator, color to color. Ensure the wiring is not exposed after splicing.
10. Replace the terminal cover, tightening the captive screws to 10 lb-ft (14 N•m).

**NOTE: When the Handswitch is turned fully clockwise, “AUTO” should be indicated. Be sure to place the tab on the tabbed washer into the slot in the actuator body to secure the Handswitch in place.**

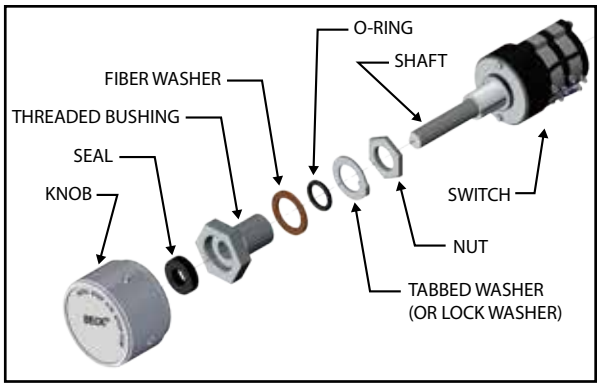


***HANDSWITCH COMPONENTS***

## GASKETS

While performing any maintenance, inspect exposed cover gaskets for wear or damage. In order to protect internal components, worn or damaged gaskets should be replaced.

To remove, scrape all of the old adhesive and gasket material from the body housing and cover, if necessary. Replacement gaskets are self-adhering, silicone rubber. Peel the backing off the replacement gasket and carefully apply to the actuator body.

# MAINTENANCE Component Detail

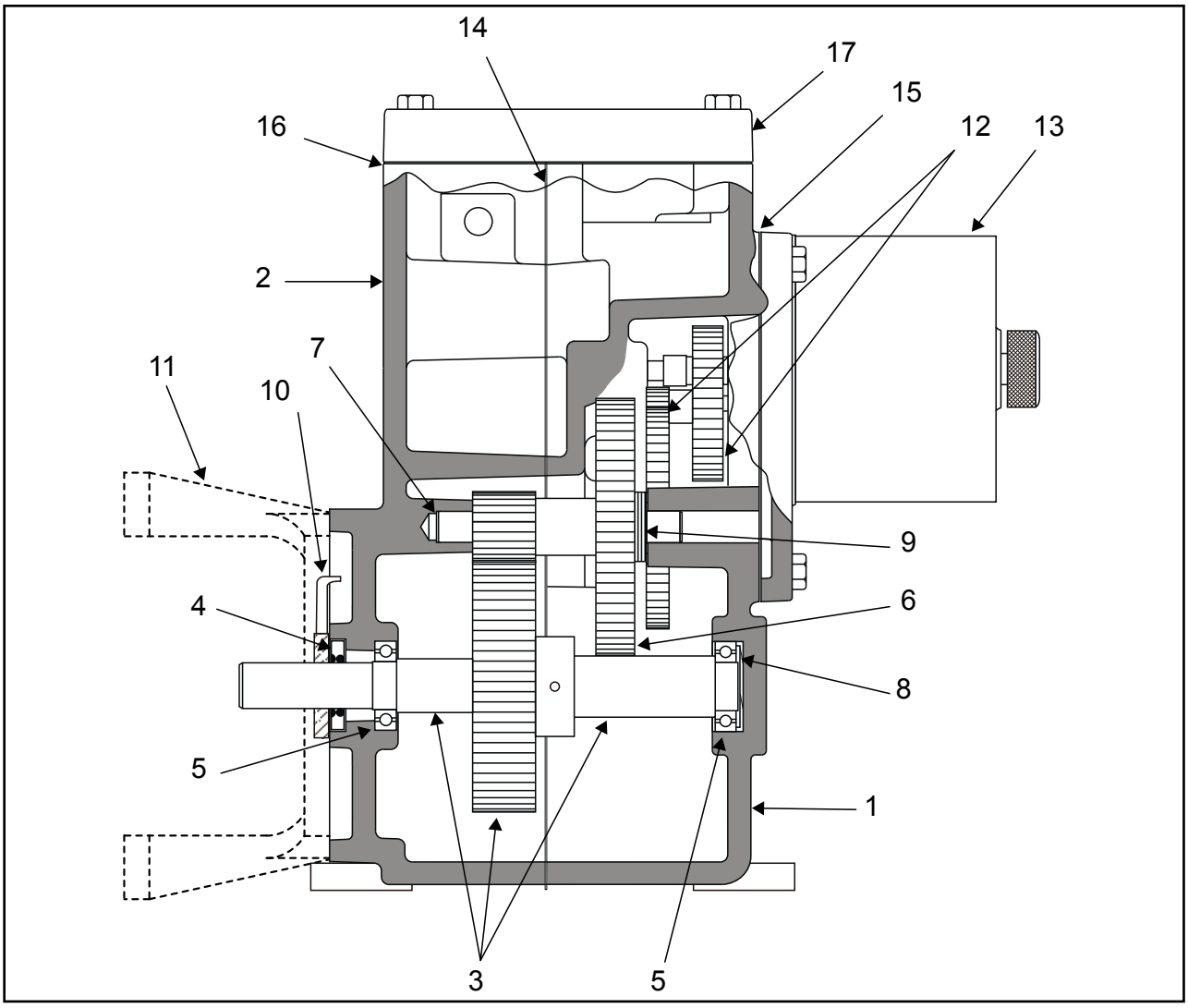


***TYPICAL ACTUATOR COMPONENTS FOR MODELS 11-1__****

| *Item Number* | *Description* | *Part Number* | *Item Number* | *Description* | *Part Number* |
|---|---|---|---|---|---|
| 1 | Body, rear | Field Replacement is not recommended<br><br>Contact Beck with actuator serial number for additional information | 12 | Gear module assembly | (see torque & timing table, page 56) |
| 2 | Body, front | | 13 | Motor Assembly | |
| 3 | Output shaft assembly | | 14 | Gasket, body | 20-0660-83 |
| 4 | Seal, output shaft | | 15 | Gasket, motor assembly | 20-0660-15 |
| 5 | Ball bearing, output shaft (2) | | 16 | Gasket, terminal cover | 20-0660-16 |
| 6 | Gear, 3rd combination | | 17 | Terminal compartment cover | 14-9744-20 |
| 7 | Pin, 3rd combination gear | | 18 | Terminal Block assembly** (23 terminals) | 20-1541-01 |
| 8 | Spring washer | | 19 | Control end compartment cover** | 11-0990-20 |
| 9 | Thrust washer | | 20 | Gasket, control end cover** | 10-8080-02 |
| 10 | Index pointer (model 11-15_ only) | 10-4620-01 | 21 | Gasket, ESR cover** | 20-0660-17 |
| 11 | Bracket (model 11-16_ only) (Note: check valve mounting specification for part number) | see note | 22 | ESR compartment cover** | 13-2341-01 |

*Note: To ensure exact replacement parts, contact Beck with the model /serial number found on your actuator nameplate.

** Not shown in this view.

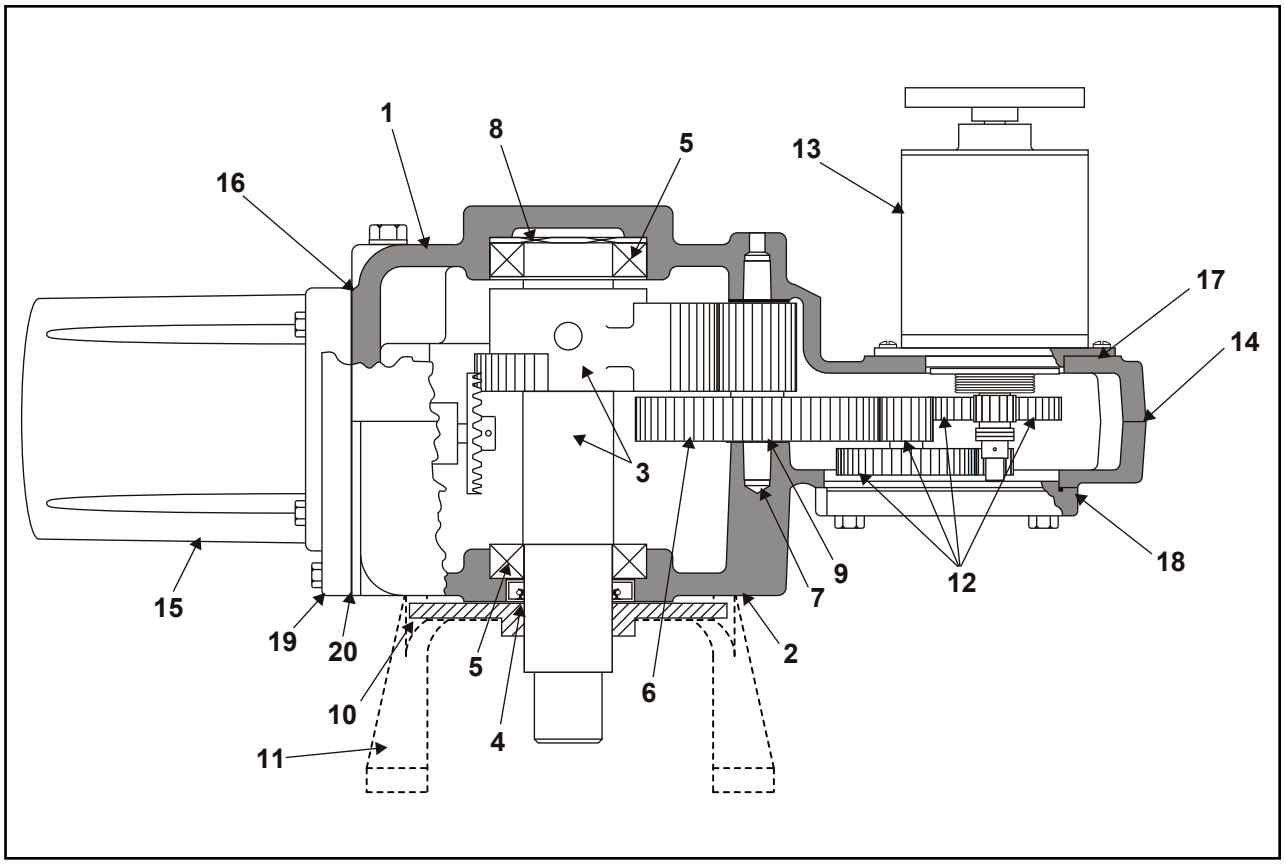


## *TYPICAL ACTUATOR COMPONENTS FOR MODELS 11-2__ / -3__**

| *Item Number* | *Description* | *Part Number* | *Item Number* | *Description* | *Part Number* |
|---|---|---|---|---|---|
| 1 | Body, rear | Field Replacement is not recommended<br><br>Contact Beck with actuator serial number for additional information | 12 | Gear module assembly | (see torque & timing table, page 56) |
| 2 | Body, front | | 13 | Motor Assembly | |
| 3 | Output shaft assembly (11-2__) | | 14 | Gasket, body | 20-0660-06 |
| | Output shaft assembly (11-3__) | | 15 | Control end compartment cover | 11-0990-20 |
| 4 | Seal, output shaft | | 16 | Gasket, control end cover | 10-8080-02 |
| 5 | Ball bearing, output shaft (2) | | 17 | Gasket, motor assembly | 20-0660-27 |
| 6 | Gear, 3rd combination | | 18 | Gasket, gear module assembly | 20-0660-26 |
| 7 | Pin, 3rd combination gear | | 19 | Terminal & ESR compartment cover | 14-9741-03 |
| 8 | Spring washer | | 20 | Gasket, ESR & terminal cover | 20-0660-03 |
| 9 | Thrust washer | | 21 | Terminal Block assembly** (23 terminals) | 20-1541-01 |
| 10 | Index (model 11-20_ / 11-30_ only) | 14-9900-01 | 22 | Barrier Plate** | 20-2960-08 |
| 11 | Bracket (model 11-26_ / 11-36_ only) (Note: check valve mounting specification for part number) | see note | 23 | Gasket, barrier plate** | 20-0660-22 |

*Note: To ensure exact replacement parts, contact Beck with the model /serial number found on your actuator nameplate.

** Not shown in this view.

# MAINTENANCE Component Detail

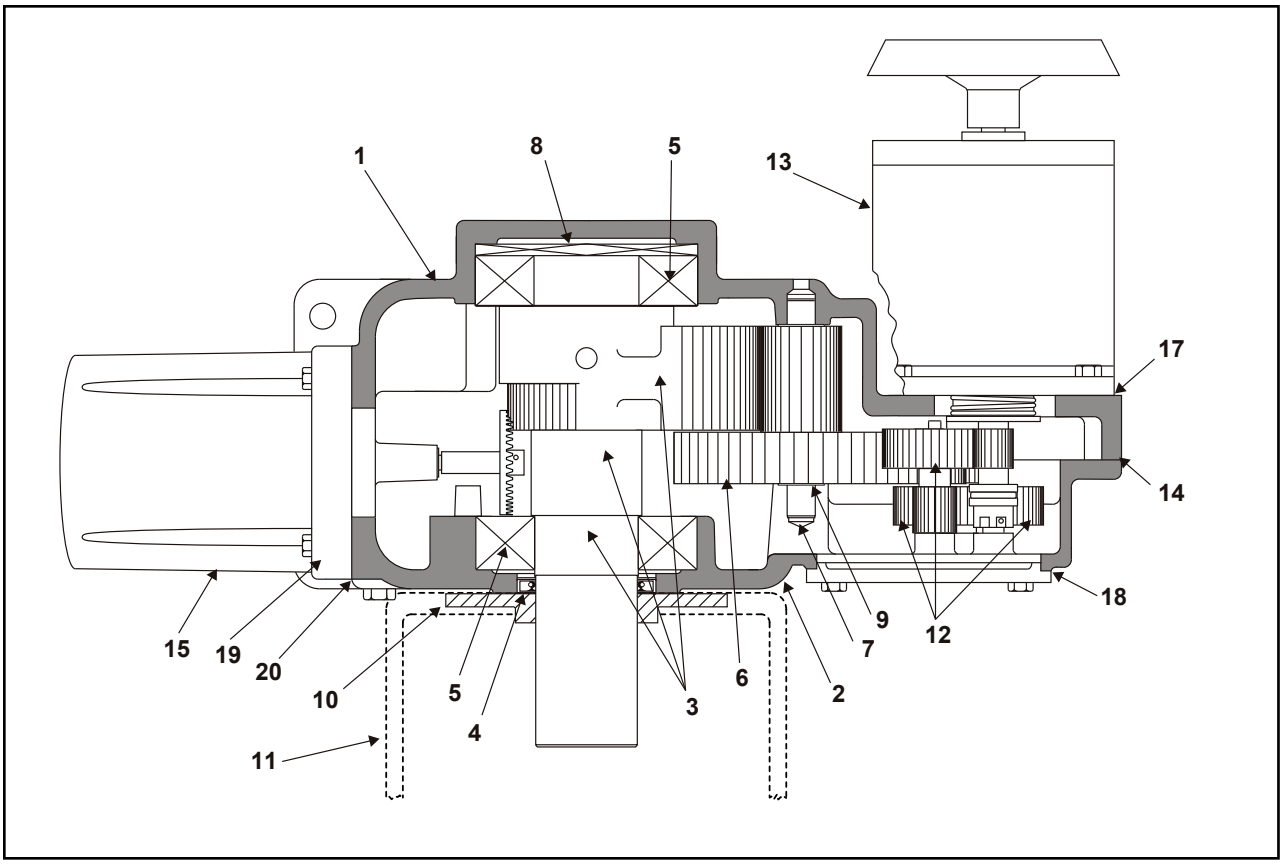


## *TYPICAL ACTUATOR COMPONENTS FOR MODELS 11-4__**

| *Item Number* | *Description* | *Part Number* | *Item Number* | *Description* | *Part Number* |
|---|---|---|---|---|---|
| 1 | Body, rear | Field Replacement is not recommended<br><br>Contact Beck with actuator serial number for additional information | 12 | Gear module assembly | (see torque & timing table, page 56) |
| 2 | Body, front | | 13 | Motor Assembly | |
| 3 | Output shaft assembly (11-4__) | | 14 | Gasket, body | 20-0660-09 |
| | | | 15 | Control end compartment cover | 11-0990-20 |
| 4 | Seal, output shaft | | 16 | Gasket, control end cover** | 10-8080-02 |
| 5 | Ball bearing, output shaft (2) | | 17 | Gasket, motor assembly | 20-0660-08 |
| 6 | Gear, 3rd combination | | 18 | Gasket, gear module assembly | 20-0660-07 |
| 7 | Pin, 3rd combination gear | | 19 | Terminal & ESR compartment cover | 14-9741-03 |
| 8 | Spring washer | | 20 | Gasket, ESR & terminal cover | 20-0660-03 |
| 9 | Thrust washer | | 21 | Terminal Block assembly** (23 terminals) | 20-1541-01 |
| 10 | Index (model 11-40_ only) | 14-9901-02 | 22 | Barrier Plate** | 20-2960-08 |
| 11 | Bracket (model 11-46_ only) (Note: check valve mounting specification for part number) | see note | 23 | Gasket, barrier plate** | 20-0660-22 |

*Note: To ensure exact replacement parts, contact Beck with the model /serial number found on your actuator nameplate.

** Not shown in this view.

# MAINTENANCE Spare Parts & Part Numbers

## RECOMMENDED SPARE PARTS

The table to the right indicates the common recommended spare parts that may be utilized across many Group 11 actuator models.

The Beck website (www.haroldbeck.com) provides an actuator serial number lookup tool. The tool will display the actuator torque and timing which can be cross-referenced to a motor part number on the "Torque & Timing" table (page 56) if the part numbers are not known.

### COMMON RECOMMENDED SPARE PARTS

| Description | Part Number |
|---|---|
| ESR-5 board (option 7 & 8 only) | See table, p. 13 |
| Relay board (option 5 & 6 only) | See table, p. 13 |
| Fuse, 6A, 250V | 13-2230-03 |
| CPS-5 assembly (option 6 & 8 only) | See table, p. 13 |
| Control motor | See below |
| Motor resistor | See below |
| Motor capacitor | See below |

| Description | Part Number |
|---|---|
| Fuse (F1) w/ operating voltage >120 V | See page 49 |
| Limit switch assy. (CW / CCW) | 20-3202-10 |
| Auxiliary switch assy. | |
| 2 switches (S1–S2) | 20-3202-11 |
| 4 switches (S1–S4) | 20-3202-12 |
| Film potentiometer (option 5 & 7 only) | 20-3060-03 |
| Gasket kit | See below |

### GASKETS, MOTORS[a], RESISTORS, & CAPACITORS

| Actuator Model Number | Gasket Kit Part Number | Motor | | | | | Capacitor | | Resistor | |
|---|---|---|---|---|---|---|---|---|---|---|
| | | Part Number | Current (Amps at 120 Vac, 60 Hz[c]) | Torque (N•m) | RPM | Freq. (Hertz) | Part Number | Value (µf) | Part Number | Value (Ω) |
| 11-1__ | 20-3110-01 | 20-2700-20 | .17 | 0.5 | 72 | 60 | 14-2840-02 | 2 | 11-5802-03 | 500 |
| | | | | | | 50 | 14-2840-13 | 3 | 11-5802-03 | 500 |
| | | 20-2701-20 | .31 | 1.0 | 72 | 60 | 14-2840-11 | 4 | 11-5802-02 | 475 |
| | | | | | | 50 | 14-2840-31 | 6 | 11-5802-06 (2 req'd) | 180 ea. |
| | | 20-2204-20 | .44 | 1.5 | 72 | 60 | 14-2840-16 | 5 | 11-5801-12[d] | 220 |
| | | | | | | 50 | 14-2840-19 | 7 | 11-5801-12[d] | 220 |
| | | 20-2701-51 | .32 | 1.0 | 120 | 60 | 14-2840-16 | 5 | 11-5801-12[d] | 220 |
| | | | | | | 50 | 14-2840-31 | 6 | 11-5801-12[d] | 220 |
| 11-2__ & 11-3__ | 20-3110-02 | 20-2704-21 | .43 | 1.5 | 72 | 60 | 14-2840-16 | 5 | 20-1971-13 | 220[b] |
| | | | | | | 50 | 14-2840-19 | 7 | 20-1971-13 | 220[b] |
| | | 20-2705-21 | .71 | 3.0 | 72 | 60 | 14-2840-05 | 8 | 20-1971-12 | 110[b] |
| | | | | | | 50 | 14-2840-30 | 13 | 20-1971-12 | 110[b] |
| | | 20-2705-51 | .74 | 3.3 | 120 | 60 | 14-2840-29 | 9 | 20-1971-14 | 68[b] |
| | | | | | | 50 | 14-2840-30 | 13 | 20-1971-15 | 72[b] |
| 11-4__ | 20-3110-03 | 20-2201-31 | 1.3 | 7.0 | 72 | 60 | 14-2840-17 | 15 | 20-1971-03 | 75[b] |
| | | | | | | 50 | 14-2840-16<br>14-2840-17 | 5<br>15 | 20-1971-03 | 75[b] |
| | | 20-2201-32 | 2.3 | 14.0 | 72 | 60 | 14-2840-15 | 25 | 20-1971-04 | 37.5[b] |
| | | | | | | 50 | 14-2840-05<br>14-2840-15 | 8<br>25 | 20-1971-04 | 37.5[b] |
| | | 20-2201-33 | 3.0 | 14.0 | 120 | 60 | 14-2840-15<br>14-2840-09 | 25<br>6 | 20-1971-06 | 18[b] |
| | | | | | | 50 | 14-2840-15<br>14-2840-05<br>14-2840-09 | 25<br>8<br>6 | 20-1971-10 | 24[b] |

[a] All motors listed are rated 120 V ac regardless of operating voltages using optional transformers.
[b] This is a resistor assembly.
[c] 50 Hz currents do not exceed 120% of the 60 Hz levels.
[d] Alternate power options (other than 120 or 240 V ac) require (2) 110Ω resistors, part no. 11-5802-05, in lieu of resistor shown.

# MAINTENANCE Spare Parts & Part Numbers

## TORQUE & TIMING LISTED BY MOTOR AND GEAR MODULE ASSEMBLY

| Actuator Model No. | Motor Part No. | Motor Current (Amps at 120 Vac, 60 Hz[1]) | Gear Module Assy. No. | Torque (lb-ft) | Timing @ 60 hz[2] | |
|---|---|---|---|---|---|---|
| | | | | | Models 11-15_, -2__, -3__, -4__ (sec./100°) | Models 11-16_, -26_, -36_, -46_ (sec./90°) |
| 11-1__ | 20-2700-20 | .17 | 14-9733-04 | 20 (27 N•m) | 20 | 18 |
| | | | 14-9733-03 | 40 (54 N•m) | 40 | 36 |
| | | | 14-9733-02 | 60 (81 N•m) | 60 | 54 |
| | | | 14-9733-01 | 80 (108 N•m) | 90 | 81 |
| | 20-2701-20 | .31 | 14-9733-05 | 15 (20 N•m) | 11 | 10 |
| | | | 14-9733-04 | 40 (54 N•m) | 20 | 18 |
| | | | 14-9733-03 | 80 (108 N•m) | 40 | 36 |
| | 20-2701-51 | .32 | 14-9733-04 | 40 (54 N•m) | 12 | 11 |
| | | | 14-9733-03 | 80 (108 N•m) | 24 | 22 |
| | 20-2204-20 | .44 | 14-9733-03 | 120 (163 N•m) | 40 | 36 |
| 11-2__ | 20-2704-21 | .43 | 14-9730-04 | 125 (169 N•m) | 40 | 36 |
| | | | 14-9730-05 | 175 (237 N•m) | 60 | 54 |
| | | | 14-9730-08 | 250 (339 N•m) | 75 | 68 |
| | 20-2705-21 | .71 | 14-9730-02 | 125 (169 N•m) | 20 | 18 |
| | | | 14-9730-04 | 250 (339 N•m) | 40 | 36 |
| | 20-2705-51 | .74 | 14-9730-04 | 250 (339 N•m) | 24 | 22 |
| 11-3__ | 20-2704-21 | .43 | 14-9730-09 | 300 (407 N•m) | 100 | 90 |
| | 20-2705-21 | .71 | 14-9730-04 | 300 (407 N•m) | 40 | 36 |
| | | | 14-9730-05 | 400 (542 N•m) | 60 | 54 |
| | | | 14-9730-08 | 550 (746 N•m) | 75 | 68 |
| | | | 14-9730-09 | 650 (881 N•m) | 100 | 90 |
| | 20-2705-51 | .74 | 14-9730-04 | 300 (407 N•m) | 24 | 22 |
| | | | 14-9730-05 | 400 (542 N•m) | 36 | 32 |
| | | | 14-9730-08 | 550 (746 N•m) | 45 | 41 |
| 11-4__ | 20-2201-31 | 1.3 | 14-9732-05 | 350 (475 N•m) | 24 | 22 |
| | | | 14-9732-07 | 550 (746 N•m) | 40 | 36 |
| | | | 14-9732-02 | 800 (1085 N•m) | 60 | 54 |
| | | | 14-9732-04 | 1,000 (1356 N•m) | 75 | 68 |
| | | | 14-9732-03 | 1,500 (2034 N•m) | 100 | 90 |
| | 20-2201-32 | 2.3 | 14-9732-05 | 650 (881 N•m) | 24 | 22 |
| | | | 14-9732-07 | 1,000 (1356 N•m) | 40 | 36 |
| | | | 14-9732-02 | 1,800 (2440 N•m) | 60 | 54 |
| | 20-2201-33 | 3.0 | 14-9732-07 | 1,000 (1356 N•m) | 24 | 22 |
| | | | 14-9732-02 | 1,800 (2440 N•m) | 36 | 32 |

CAUTION: Use only the motor and gear module combinations listed above; other combinations may cause internal damage to the actuator and/or damage to the external equipment.

[1] 50 Hz currents do not exceed 120% of 60 Hz levels.

[2] 50 Hz timing = 1.2 x 60 Hz timing.

# TROUBLESHOOTING

If your unit contains a Stall Protection Module (SPM), refer to publication 80-0017-03, "Troubleshooting".

| CONDITIONS | POSSIBLE CAUSES | CORRECTIONS |
|---|---|---|
| Actuator will not run in either direction with demand signal applied to ESR-5. No LEDs lit on ESR-5. | Handswitch left in wrong position. | Return Handswitch to AUTO position. |
| | No 120 V ac line supply. | Check fuses and switches in power panel. |
| | Fuse F1 open. | Check for possible shorts, then replace fuse. Use only Beck part no. 13-2230-03 for proper protection of triacs. |
| | External auto/man switch in wrong position (Position-All). | Return switch to AUTO position. |
| | ESR-5 failure. | Replace ESR-5. |
| | Jumpers between terminals F–N & D–M not connected. | Connect jumpers. |
| Actuator will not run in either direction with demand signal applied to ESR-5 board. CPS-5 LED light out and jumper removed from monitor board relay. | No power. | Check power source. Check CPS-5 power supply voltage. Check CPS-5 transformer. |
| | Actuator positioned beyond calibrated limits. | Position actuator with Handwheel and check limit switch settings. |
| | CPS-5 rotor position not properly set. | Set CPS-5 rotor position. |
| | CPS-5 not calibrated correctly. | Calibrate CPS-5. |
| | CPS-5 failure. | Replace CPS-5. |
| Actuator runs in only one direction in AUTO and both directions with Handswitch on CW and CCW. | ESR-5 zero adjustment incorrect. | Readjust ESR-5 zero. See Demand Signal Calibration. |
| | Handswitch failure. | Check continuity from terminal N to V and M to U with Handswitch in AUTO position. See wiring diagram. |
| | Loss of Demand signal with REVLOS or FWDLOS selected. | Check Demand signal. |
| | ESR-5 circuit board failure. | Replace ESR-5. |
| | Loss of feedback signal. | Check signal from CPS-5 or potentiometer at TP3 on ESR-5. |
| | Jumper between F–N or D–M (F–M or D–N) not connected. | Connect jumper. |
| Loss of ESR-5 signal LED lights (red LED) with Demand signal applied. | ESR-5 zero adjustment incorrect. | Readjust ESR-5 zero. See Demand Signal Calibration. |
| | Demand signal reversed. | Check polarity of Demand signal. Terminal AA(+), Terminal BB(–). |
| | ESR-5 failure. | Replace ESR-5. |
| | Slidewire equipped actuator w/ ESR-5 calibrated for CPS-5. | Cut J3 and J13 resistors and recalibrate ESR-5. |
| | Incorrect film potentiometer setting. | Reset film potentiometer. |
| | Control signal wired through CPS-5 monitor relay. Monitor LED is out. | Actuator position beyond calibrated range. Use Handswitch or Handwheel to put actuator within normal operating range. |
| Actuator runs in the wrong direction with Demand signal applied. | Demand signal reversed. | Check polarity of Demand signal. Terminal AA(+), terminal BB(–). |
| | Actuator configured for wrong direction of travel. | Change direction of rotation. |
| Actuator does not follow Demand signal until maximum or minimum signal is reached, then drives uncontrollably to limit. | Wire jumpers on terminals M and N are reversed or potentiometer end connections are reversed. | Change direction of shaft rotation. Check correct film potentiometer connections (see p. 34). |
| | CPS-5 feedback out of phase with control motor. | Restore proper phasing of CPS-5 feedback w/ control motor. |
| Actuator motor oscillates in AUTO mode. | Feedback potentiometer dirty. | Clean or replace potentiometer. |
| | Excessive noise on Demand signal. | Check setting of input filter. May require increased dead-band setting if oscillation remains w/ max. filter setting. |
| | Physical obstruction (e.g., valve jammed or load greatly exceeds rating of actuator). | Check operation with Handswitch and remove obstruction if present. Handswitch bypasses ESR-5. |
| | ESR-5 failure. | Replace ESR-5. |
| | Excessive wear in gear train or bearings. | Replace worn drive train parts. |
| Actuator motor erratic or runs in wrong direction in automatic manual operation. | Control motor winding open. | Replace control motor. |
| | Control motor capacitor shorted or open. | Replace capacitor. |
| | Control motor resistor open. | Replace resistor. |
| Actuator will not run either direction or one direction in automatic or manual operation. | Limit switch failure. | Replace limit switch. |
| | Handswitch failure. | Replace Handswitch. |
| Actuator runs erratic from 100° to 0° and runs normally from 0° to 100° in AUTO. | Feedback potentiometer dirty. Loss of feedback voltage drives the unit towards the 100% limit. | Clean feedback potentiometer with mild soap and water. |
| Actuator runs uncontrollably to some position, then oscillates. | Feedback potentiometer open. | Replace feedback potentiometer. |
| Actuator does not stop at normal or desired limit of shaft travel. | ESR-5 span or zero adjusted incorrectly. | Recalibrate the ESR-5 board. |
| | Limit switches adjusted incorrectly. | Readjust limit switches. |
| | Loss of Demand signal. Check ESR-5 LED. | Restore Demand signal to actuator. |
| | Limit switch failure. | Replace limit switch. |
| | CPS-5 calibration incorrect. | Calibrate CPS-5. |
| Loss of Demand signal feature does not function. | Incorrectly set potentiometer. | Reset potentiometer. |
| | CPS-5 calibration incorrect. | Calibrate CPS-5. |

# TROUBLESHOOTING

| CONDITIONS | POSSIBLE CAUSES | CORRECTIONS |
|---|---|---|
| Actuator drives to 100% limit with small change in Demand signal. | Feedback potentiometer power shorted. | Check potentiometer and wiring for shorts. |
| | ESR-5 failure of 2.7V power supply (feedback potentiometer only). | Replace ESR-5. |
| | Wiper and low end of feedback potentiometer reversed. | Check wiring on feedback potentiometer for proper connections. |
| | Open potentiometer element. | Replace potentiometer. |
| | CPS-5 feedback out of phase with control motor. | Restore proper phasing of CPS-5 feedback with motor control. |
| Actuator drives to 100% and stays. | Handswitch left in CW / CCW position. | Return Handswitch to AUTO position. |
| | Potentiometer open or complete loss of contact with wiper. | Check potentiometer and replace if necessary. |
| | Loss of Demand signal when FWDLOS is selected. ESR-5 LED on. | Restore Demand signal to actuator. |
| | ESR-5 zero adjustment incorrect. | Readjust ESR-5 zero. See Demand Signal Calibration. |
| | ESR-5 circuit board failure. | Replace ESR-5. |
| | CPS-5 feedback out of phase with control motor. | Restore proper phasing of CPS-5 feedback with control motor. |
| | Jumper between terminal F–N (F–M) not connected. | Connect jumper. |
| | CCW / CW limit switch failure. | Replace limit switch. |
| Actuator travel very non-linear: | | |
| •e.g., 4–19 mA change on input causes actuator to drive from 0% to 30%; 19–20 mA change drives 30% to 100%. | Wiper and high end of feedback potentiometer reversed. | Check feedback potentiometer for proper connections. |
| •Response normal from zero to mid-range, then runs to 100%. | CPS-5 power supply failure. | Check CPS-5 power supply voltage. See below. |
| •Output is 25% with 50% Demand signal, but OK at 0% and 100% inputs. | Actuator has square function ESR-4. | Replace with appropriate ESR-5. |
| L.O.S. operates at too high a signal level. | Special requirement. | Change L.O.S. trip point. |
| CPS-5 LED goes out during normal travel. | CPS-5 not correctly calibrated. | Calibrate CPS-5. |
| Potentiometer or CPS-5 output decreases when it should increase. | CPS-5 rotor position not set for proper rotation. | Reset CPS-5 rotor position. |
| | End connections on potentiometer reversed. | Calibrate potentiometer. |
| CPS-5 output non-linear. | CPS-5 rotor position not set properly. | Reset CPS-5 rotor position. |
| | CPS-5 zero potentiometer improperly adjusted. | Refer to factory. |
| CPS-5 output does not reach maximum signal, but low end calibration is correct. | Output is overloaded:<br>•load resistance is too low for voltage range.<br>•load resistance is too high for current range. | Check load resistance against suggested feedback signal terminal hook-up. |
| | Low voltage:<br>•CPS-5 power failure. | Check line voltage at CPS-5 transformer terminals 1 and 3. Check CPS-5 voltage at resistor. Check CPS-5 power supply voltage across capacitors C8 (13 V, except -05.15 V), C9 (15 V), C10 and C11 (28 V). |
| | CPS-5 rotor not properly set. | Reset CPS-5 rotor position. |
| | CPS-5 zero potentiometer not properly adjusted. | Refer to factory. |
| CPS-5 out of calibration. | CPS-5 zero potentiometer inadvertently reset. | Refer to factory. |
| CPS-5 signal will not calibrate down to 4 mA. | Not enough load on meter circuit. | Connect 200 ohm resistor in series with meter. |
| | Unit being calibrated for less than 80° rotation. | Remove R8. |
| Actuator does not stay in place with power off. | SLM friction surface worn. | Replace control motor. |
| Control motor runs, but output shaft does not move in one or both directions. | SLM failure. | Replace control motor. |
| Actuator equipped with modulating option 5 or 6 and an optional relay board does not run reliably in one or both directions while in AUTO. | Controller output requires a greater holding current than the relay board draws. | Check the controller output required AC holding current. If greater than 10 mA, additional load must be provided. |

# APPENDIX CPS-5 Functional Block Diagrams

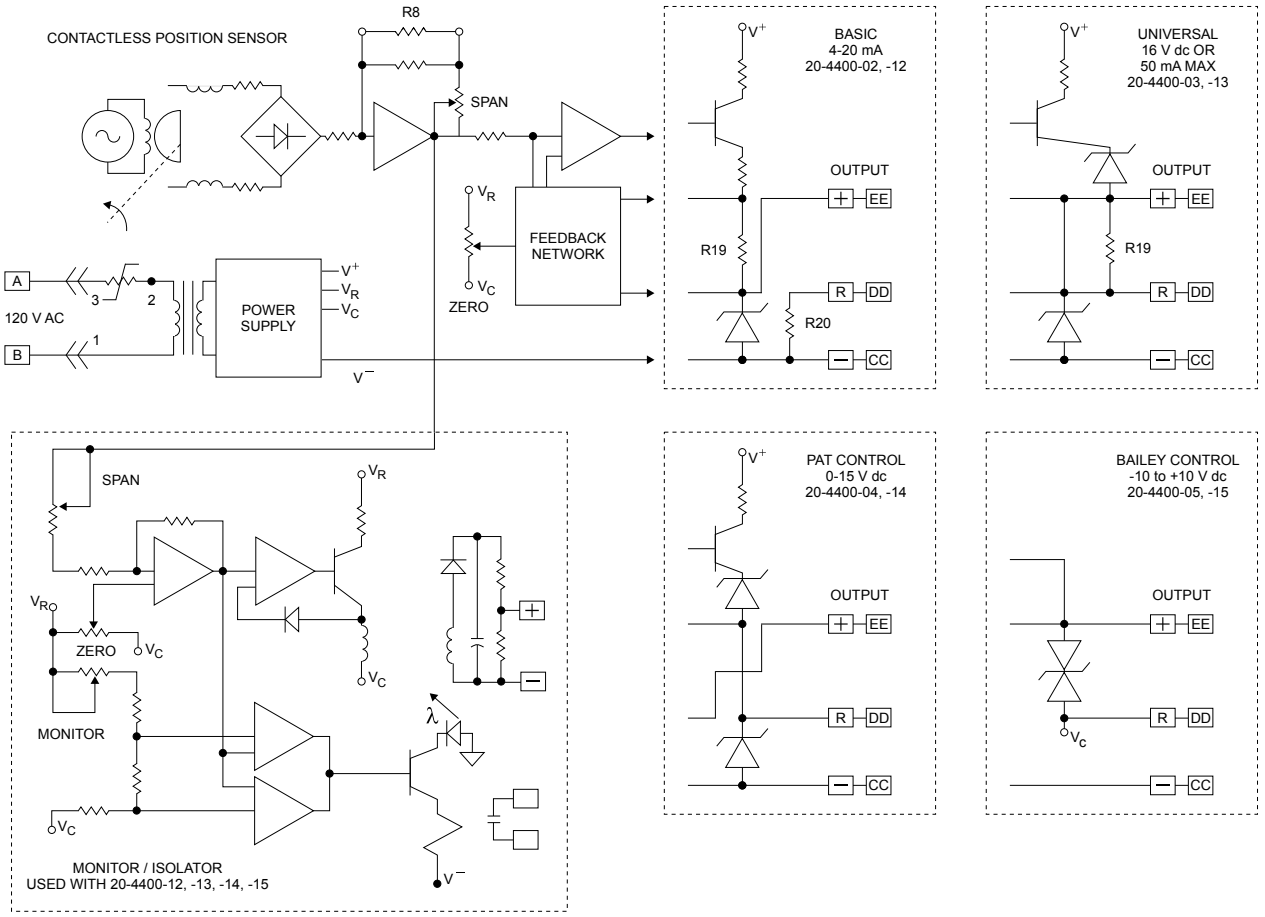


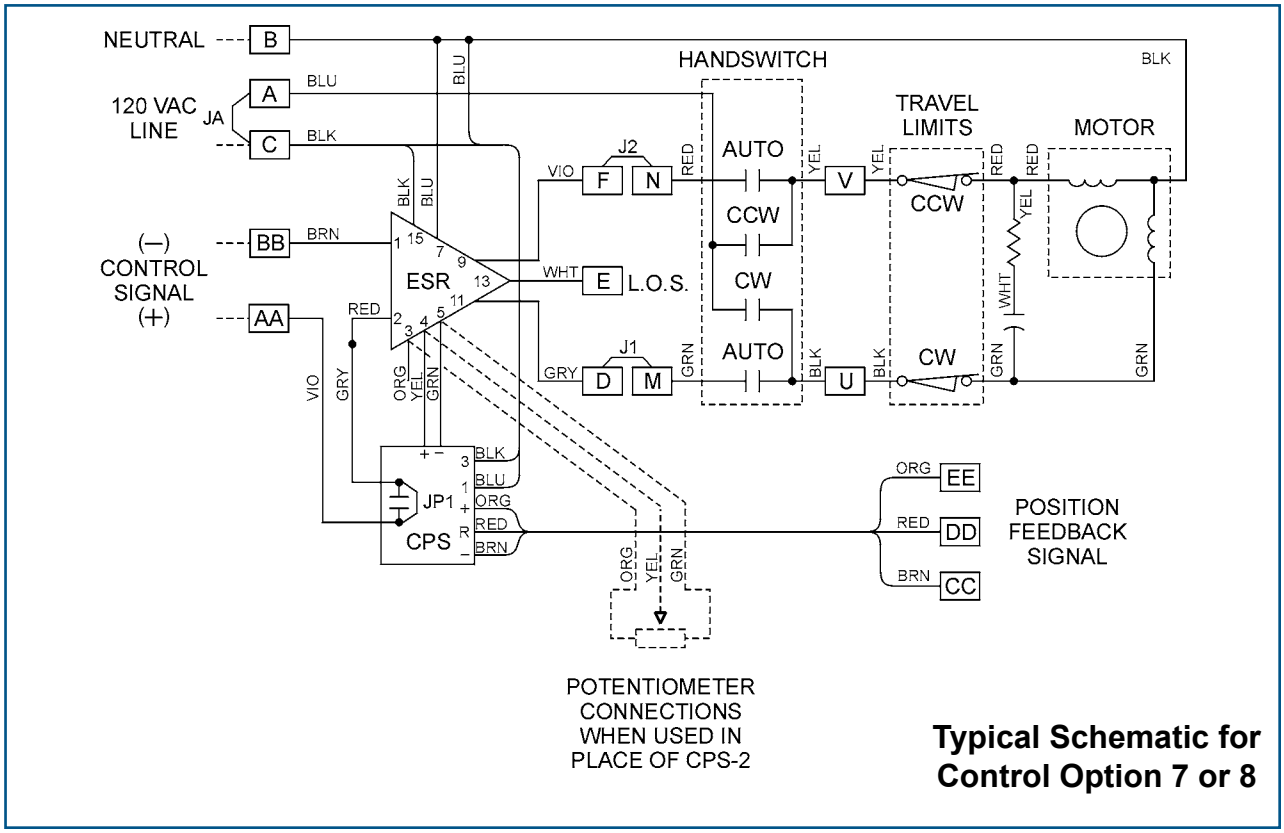


**Typical Schematic for Control Option 7 or 8**

# APPENDIX CPS-5 Data

## CPS-5 SYSTEM APPLICATION DATA SUMMARY

| FEEDBACK SIGNAL OPTIONS | CPS-5 MODEL NO. | EXTERNAL LOAD RESISTANCE | COMPATIBLE CONTROL SYSTEMS |
|---|---|---|---|
| Current Signals | | | |
| 4 to 20 mA | 20-4400-02 & -12<br>20-4400-03 & -13† | 800Ω (Max.)<br>500Ω (Max.) | Industry Std (ISA) |
| 10 to 50 mA | 20-4400-03 & -13† | 200Ω (Max.) | Foxboro |
| 1 to 5 mA | 20-4400-03 & -13† | 2KΩ (Max.) | General Use |
| Voltage Signals | | | |
| 1 to 5 V DC | 20-4400-03 & -13† | 250Ω (Min.) | Industry Std (ISA)<br>Beck Position-All (27-301,-401,-501) |
| 0 to 5 V DC | 20-4400-03 & -13† | 250Ω (Min.) | Leeds and Northrup |
| 0 to 10 V DC | 20-4400-03 & -13† | 1KΩ (Min.) | Bailey, Foxboro, & Westinghouse |
| 0 to 16 V DC | 20-4400-03 & -13† | 1KΩ (Min.) | Leeds and Northrup |
| 0 to 15 V DC | 20-4400-04 & -14 | 6KΩ (Min.) | Leeds and Northrup |
| -10 to 10 V DC | 20-4400-05 & -15 | 2KΩ (Min.) | Bailey |

†The 20-4400-03 and -13 may be connected for signal ranges so noted. See Wiring Diagrams on pages 20–21 for details.

## CPS-5 SIGNAL OUTPUT TERMINAL CONNECTIONS AND LOADING

| SIGNAL RANGE | OUTPUT TERMINALS (+) (–) | RANGING RESISTOR | | RESISTOR CONNECTIONS | MAXIMUM EXTERNAL LOAD |
|---|---|---|---|---|---|
| | | VALUE | BECK PART NO. | | |
| **Models 20-4400-02, -12** | | | | | |
| 4 to 20 mA | EE—CC | Open | | | 800Ω |
| 4 to 20 mA | EE—DD | Open | | | 500Ω |
| **Models 20-4400-03, -13** | | | | | |
| Current Output | | | | | |
| 0 to 4 mA* | DD—CC | Open | | | 2 KΩ |
| 1 to 5 mA | DD—CC | Open | | | 2 KΩ |
| 4 to 20 mA | DD—CC | 332Ω | 13-2511-06 | DD—EE | 500Ω |
| 10 to 50 mA | DD—CC | 110Ω | 13-2510-25 | DD—EE | 200Ω |
| Voltage Output | | | | | |
| 0 to 4 V dc* | EE—CC | Jumper | | | 16 mA |
| 0 to 5 V dc* | EE—CC | 249Ω | 13-2511-08 | CC—DD | 16 mA |
| 0 to 10 V dc* | EE—CC | 1.5 KΩ | 13-2512-02 | CC—DD | 16 mA |
| 0 to 15 V dc* | EE—CC | 2.74 KΩ | 13-2513-42 | CC—DD | 16 mA |
| 1 to 5 V dc | EE—CC | Jumper | | CC—DD | 16 mA |
| 2 to 10 V dc | EE—CC | 1.00 KΩ | 13-2512-01 | CC—DD | 16 mA |
| 0 to 16 V dc* | EE—CC | 3.01 KΩ | 13-2513-26 | CC—DD | 16 mA |
| **Models 20-4400-04, -14** | | | | | |
| 0 to 15 V dc | DD—CC | Open | | | 2.5 mA |
| 15 to 0 V dc | EE—DD | Open | | | 2.5 mA |
| **Models 20-4400-05, -15** | | | | | |
| -10 to 10 V dc | EE—DD | Open | | | 5 mA |

*If factory set for 4–20 mA, zero potentiometer adjustment is required after installation. See page 38.

# APPENDIX Optional LED Display

The optional LED display board (p/n 22-5008-49) for open/close and AC-pulsed Beck actuators (Control option 3 through 6) provides lighted color indication of the actuator output position. The board resides in the same location (the electronics compartment) as that of the optional DCM display board available with 4–20 mA modulating actuators (control option 9). The same compartment cover with a tempered glass window is used with all versions.

This display board includes a red, green and yellow LED to indicate the actuator output position. The lights are driven by 120 V ac actuator power and are energized using the actuator's internal auxiliary switches.

The red and green LEDs, which are intended to indicate OPEN and CLOSE ends-of-travel are easily setup by connecting jumpers on the actuator's terminal block (see the wiring diagram on the next page).

The yellow LED will light whenever both the red or green LED are not lit (when the actuator is not at either end-of-travel limit). If desired, the yellow LED may be turned off with a slide switch located on the board.

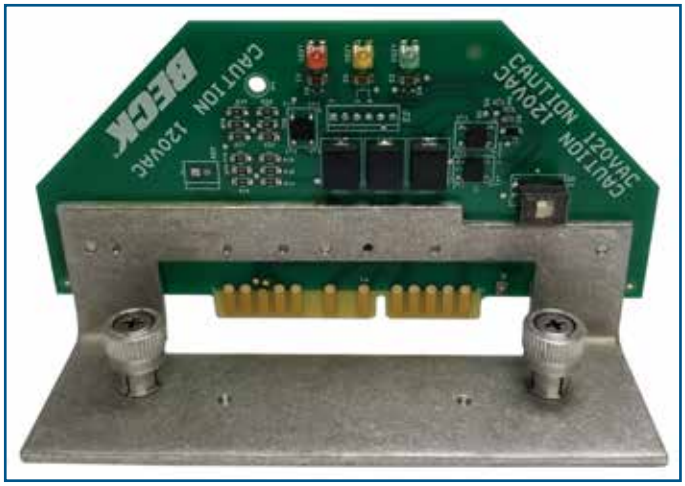


***OPTIONAL LED DISPLAY BOARD***

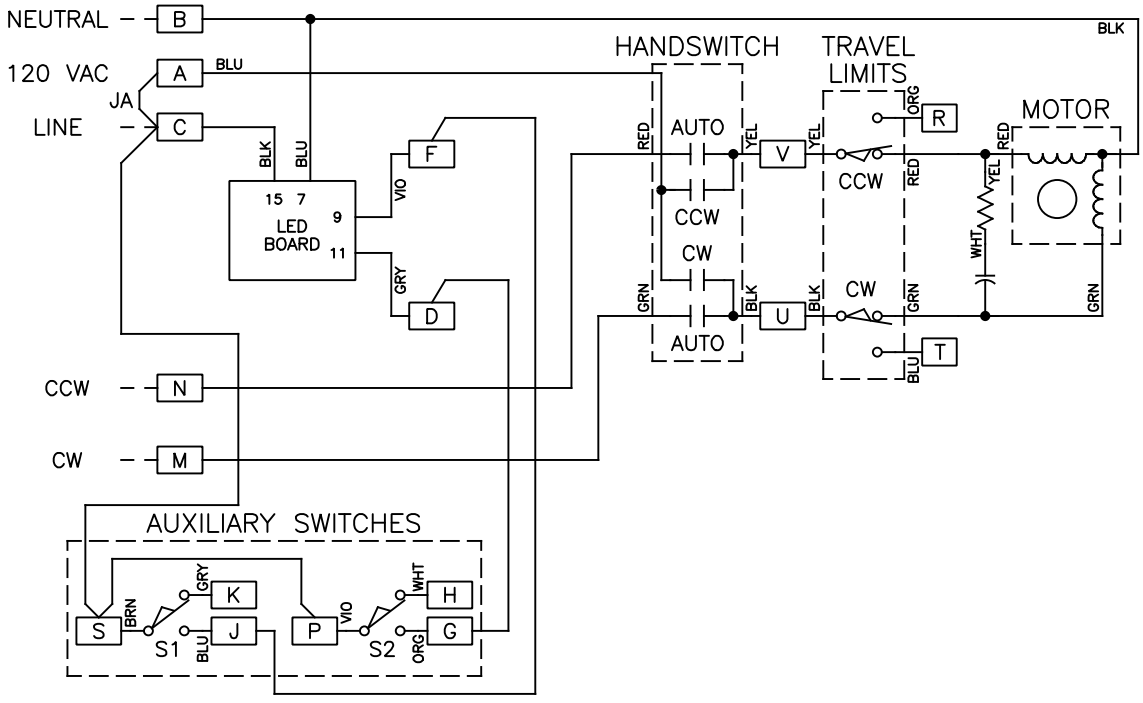


***TYPICAL WIRING DIAGRAM WITH TWO AUXILIARY SWITCHES***

# INDEX


Appendices ..... 59–61
CPS-5 Functional Block Diagrams ..... 59
CPS-5 Data ..... 60
Optional LED Display ..... 61
Application Reviews ..... 63
Auxiliary Limit Switches ..... 32, 48
Setting Switches ..... 32
Component Detail ..... 52–54
Component Location ..... 14
Component Replacement ..... 44–51
Calibration ..... 30–42
Demand Signal ..... 38–42
Direction Change ..... 33–34
Feedback Signal ..... 35–38
Switches ..... 31–32
Contactless Position Sensor (CPS-5) ..... 23–24, 29, 35–38, 50
Control Options, Summary ..... 12
Demand Calibration ..... 38–40
Demand Signal ..... 38–42
Direction of Output Shaft Rotation ..... 33–34
Electronic Signal Receiver (ESR-5) ..... 25–26, 29, 38–41
Feedback Signal ..... 35–38
General Specifications ..... 4–5
Handswitch ..... 28, 51
Handwheel ..... 28
How to Obtain Service ..... 63
Installation ..... 15–26
Direct-Mount ..... 15
Electrical ..... 20
Linkage-connected ..... 16–19
Link-Assist™ ..... 16
Mechanical ..... 15–19
Valves ..... 15
Wiring ..... 21–26
Introduction ..... 2
Limit Switches (Over-travel) ..... 31, 48
Setting Switches ..... 31
Linkage Kits ..... 17–18
Loss of Demand Signal (LOS) ..... 30
Maintenance ..... 43–56
Component Detail ..... 52–54
Component Replacement ..... 44–51
CPS-5 ..... 50
ESR-5 Board ..... 49
Gaskets ..... 51, 55
Handswitch ..... 51
Lubrication/Gearing ..... 43
Motor Assembly ..... 44, 56
Motor Capacitor & Resistor Network ..... 44, 56
Over-travel Limit & Auxiliary Switches ..... 48
Routine ..... 43
SLM ..... 45–47
Spare Parts, Recommended ..... 55
Operation ..... 28–30
Outline Dimension Drawings ..... 6–11
Power Quality ..... 20
Precautionary Information ..... 13
Product Demonstrations ..... 63
Relay Board ..... 42
Self-Locking Mechanism (SLM) ..... 28, 45–47
Services ..... 63
Site Surveys ..... 63
Spare Parts, Recommended ..... 55
Specification Writing ..... 63
Stall Protection and Annunciation, Optional ..... 5
Start-up ..... 27
Storage Information ..... 13
Table of Contents ..... 3
Torque and Timing ..... 56
Travel (Degrees Rotation) ..... 33
Change Travel ..... 33–34
Troubleshooting ..... 57–58
Warranty Statement ..... 63

# SERVICES

## PRODUCT DEMONSTRATIONS

Each of Beck's Sales Engineers has access to a complete set of actuator models so that he can demonstrate virtually any of their features at your location. In order to arrange to see a Beck actuator in your plant or office, contact Beck's Sales Department.

## SITE SURVEYS

Beck Sales Engineers are available to discuss your process control requirements. Often a visit to your location is the best way to gain a thorough understanding of your needs, in order to meet them most accurately and completely.

Mounting hardware, torque requirements, linkage, control signal information, and optional equipment can be analyzed most effectively at the work site. Beck's analysis at the job site can help ensure that specifications are accurate, especially in the case of complex applications.

## APPLICATION REVIEWS

By sharing your needs with a Beck Sales Engineer you can take advantage of the best application advice for the type of control you need. This review will yield a better understanding of the versatility of Beck actuators for your installations, as well as complete details on options and accessories to make the process as effective as possible.

## SPECIFICATION WRITING

Beck provides specification writing assistance in order to help you specify and order the right actuators for your applications. Beck Sales Engineers will work with you to make it easier for you to obtain the proper equipment and give you confidence that no details are overlooked.

## HOW TO OBTAIN SERVICE

Factory repair of actuators or subassemblies is available for both normal and emergency service. To assure prompt processing, contact the factory to receive a Returned Material Authorization (RMA) number. If a repair estimation is desired, please send the name and phone number of your contact for service authorization. It is helpful to include a description of the work desired with the shipment or, in the event of a problem, the malfunction being experienced.

## THREE YEAR LIMITED WARRANTY STATEMENT*

Harold Beck & Sons, Inc. (Beck) warrants that our equipment shall conform to Beck's standard specifications. Beck warrants said equipment to be free from defects in materials and workmanship. This warranty applies to normal recommended use and service for three years from the date on which the equipment is shipped. Improper installation, misuse, improper maintenance, and normal wear and tear are not covered.

The Buyer must notify Beck of any warranty issues within 37 months of original shipment date and return the goods in question, at Buyer's expense, to Beck for evaluation. If the product fails to conform to the warranty, Beck's sole obligation and the Buyer's exclusive remedy will be: 1) the repair or replacement, without charge, at Beck's factory, of any defective equipment covered by this warranty, or 2) at Beck's option, a full refund of the purchase price. In no event will Beck's liability exceed the contract price for the goods claimed to be defective.

THIS WARRANTY IS EXPRESSLY IN LIEU OF ANY OTHER EXPRESS OR IMPLIED WARRANTY, INCLUDING IMPLIED WARRANTIES OF MERCHANTABILITY AND FITNESS FOR A PARTICULAR PURPOSE, AND ALL OTHER OBLIGATIONS OR LIABILITIES OF BECK. In no case shall Beck be liable for any special, incidental or consequential damages based upon breach of warranty, breach of contract, negligence, strict tort, or any other legal theory. Such damages include, but are not limited to, loss of profits, loss of revenue, loss of use of the equipment or any associated equipment, cost of capital, cost of any substitute equipment, facilities or service, downtime, the claims of third parties including customers and injury to property.

Buyer acknowledges its responsibilities under OSHA, related laws and regulations, and other safety laws, regulations, standards, practices or recommendations that are principally directed to the use of equipment in its operating environment. Buyer acknowledges that the conditions under which the equipment will be used, its use or combination with, or proximity to, other equipment, and other circumstances of the operation of such equipment are matters beyond Beck's control. **Buyer hereby agrees to indemnify Beck against all claims, damages, costs or liabilities (including but not limited to, attorney's fees and other legal expenses), whether on account of negligence or otherwise, except those claims based solely upon the negligence of Beck and those claims asserted by Beck's employees which arise out of or result from the operation or use of the equipment by Beck's employees.**

***Note: Internal water damage is not covered by warranty.**

© Copyright 2013 by Harold Beck & Sons, Inc.
Beck Actuators are covered by the following patents: 6,563,412 and 6,639,375.

81-0002-01A

# Declaration of Incorporation of Partly Completed Machinery

**Manufacturer:**
Harold Beck and Sons, Inc
11 Terry Drive
Newtown, PA 18940
USA
1 (215)-968-4600

**Authorized Representative in Europe:**
David Riley, Actuator Engineering
Abbeyville, Brake Road, Walesby
Newark, Nottinghamshire NG22 9N1,
United Kingdom

declare that:

**Brand:** Beck

**Type and Description of Equipment:** Rotary Actuator / Control Drive

**Product:** Models: 11-11X, 11-15X, 11-16X, 11-20X, 11-21X, 11-26X, 11-30X, 11-31X, 11-36X, 11-40X, 11-41X, 11-43X, 11-46X (where 'X' denotes Control Type – 3, 4, 5, 6, 7, 8 or 9)

are in conformity with the provisions of the following EC Directives:

**Machinery Directive (MD): 2006/42/EC**

The following harmonised standards have been applied: EN ISO 12100:2010

The partly completed machinery specified in this Declaration must not be put into service until the machinery into which it is to be incorporated has been declared in conformity with the Directive 2006/42/EC.

The following essential requirements of the Machinery Directive (Annex I) have been applied:
1.1.2, 1.1.3, 1.1.5, 1.2.1, 1.2.4.1, 1.3.1, 1.3.2, 1.3.4, 1.3.6, 1.3.7, 1.3.8, 1.5.1, 1.5.2, 1.5.5, 1.5.6, 1.5.7, 1.5.10, 1.5.11, 1.6.2, 1.7.1, 1.7.3, 1.7.4

The partly completed machinery specified in this Declaration are also in conformity with the provisions of Directives 2014/35/EU (Low Voltage) and 2014/30/EU (Electromagnetic Compatibility).

Technical documentation has been compiled in accordance with Annex VII, Pt. B of the Machinery Directive. This documentation will be made available electronically if requested by the national authorities.

F. William Belser, Jr. (Signature)

F. William Belser, Jr.
Engineering Manager

6 August 2018
(Date of Issue)

HAROLD BECK & SONS, INC.
Made in USA
11 TERRY DRIVE • NEWTOWN, PENNSYLVANIA 18940 • USA
PHONE: 215-968-4600 • FAX: 215-860-6383 • E-MAIL: sales@haroldbeck.com
www.haroldbeck.com